PRODUCT CATALOG

SAAF TRADING

9072 20 20 39







Strength in Aluminum,
Trust in Quality...

EDITION 2026

SAAF TRADING
9072 20 20 39

UV 01 - Regular Ferry (Grab)





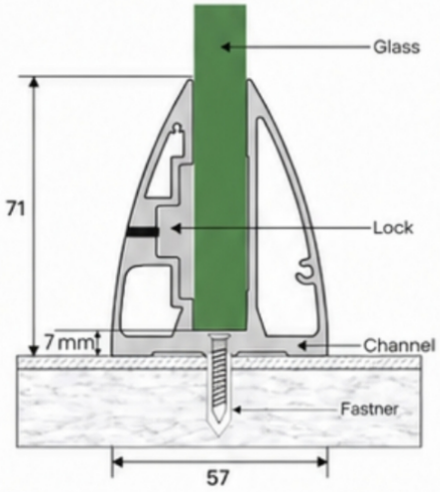

Product Details

- 100 % Recyclable
- Easy Cleaning
- Maintenance Free
- Weather Proof
- Robust for Higher Safety

Product Details

Size : 57 X 71 mm
Glass : 12 mm Glass
Length : 13Ft. / 16 Ft.
Weight : 750 Gm. (1 Feet)
Finish : Mill Finish / Powder Coating / Anodized / Wooden

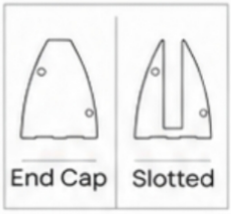

UV 02 - Clip Ferry





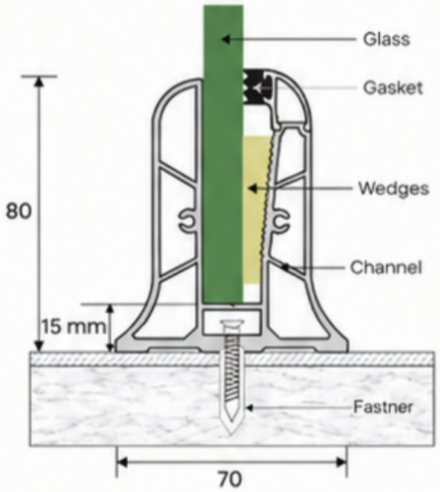

Product Details

- 100 % Recyclable
- Easy Cleaning
- Maintenance Free
- Weather Proof
- Robust for Higher Safety

Product Details

Size : 70 X 80 mm
Glass : 12 mm to 14 mm Glass
Length : 13Ft. / 16 Ft.
Weight : 950 Gm. (1 Feet)
Rubber Weight : 20 Gm. (1 Feet)
Finish : Mill Finish / Powder Coating / Anodized / Wooden

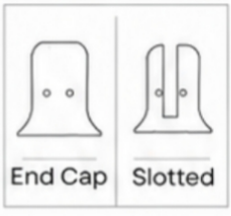

SAAF TRADING
9072 20 20 39

UV 03 - Triangle





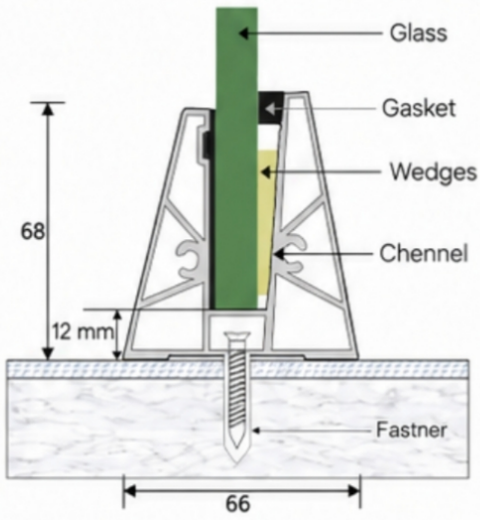

Product Details

- 100 % Recyclable
- Easy Cleaning
- Maintenance Free
- Weather Proof
- Robust for Higher Safety

Product Details

Size : 66 X 68 mm
Glass : 12 mm to 14 mm Glass
Length : 13Ft. / 16 Ft.
Weight : 700 Gm. (1 Feet)
Rubber Weight : 100 Gm. (1 Feet)
Finish : Mill Finish / Powder Coating / Anodized / Wooden

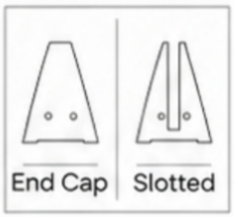

UV 04 - Modular Ferry





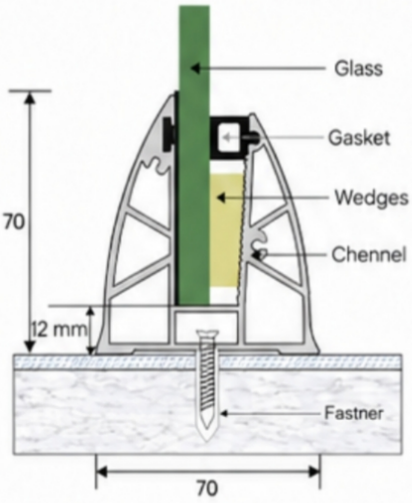

Product Details

- 100 % Recyclable
- Easy Cleaning
- Maintenance Free
- Weather Proof
- Robust for Higher Safety

Product Details

Size : 70 X 70 mm
Glass : 12 mm to 14 mm Glass
Length : 13Ft. / 16 Ft.
Weight : 650 Gm. (1 Feet)
Rubber Weight : 100 Gm. (1 Feet)
Finish : Mill Finish / Powder Coating / Anodized / Wooden

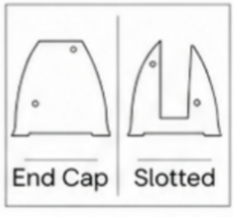

SAAF TRADING
9072 20 20 39

UV 05 - LED Triangle





LED System

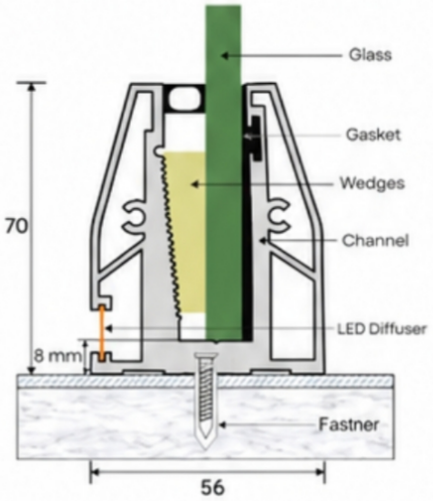

Product Details

- 100 % Recyclable
- Easy Cleaning
- Maintenance Free
- Weather Proof
- Robust for Higher Safety

Product Details

Size : 56 X 70 mm
Glass : 12 mm to 14 mm Glass
Length : 13Ft. / 16 Ft.
Weight : 950 Gm. (1 Feet)
Rubber Weight : 100 Gm. (1 Feet)
Finish : Mill Finish / Powder Coating / Anodized / Wooden

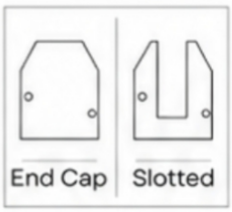

UV 06 - Commercial Ferry

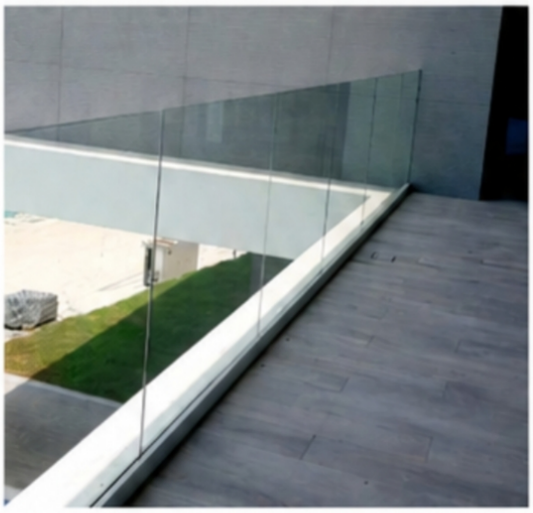



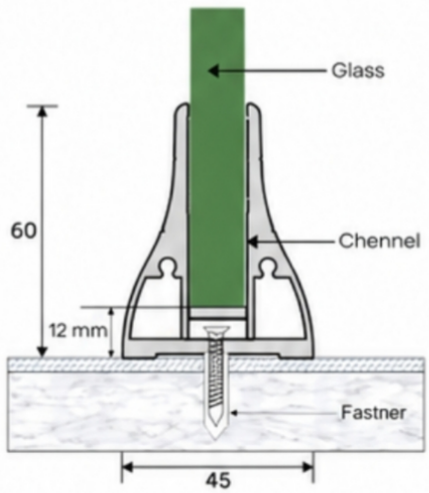

Product Details

- 100 % Recyclable
- Easy Cleaning
- Maintenance Free
- Weather Proof
- Robust for Higher Safety

Product Details

Size : 45 X 60 mm
Glass : 12 mm Glass
Length : 13Ft. / 16 Ft.
Weight : 550 Gm. (1 Feet)
Finish : Mill Finish / Powder Coating / Anodized / Wooden

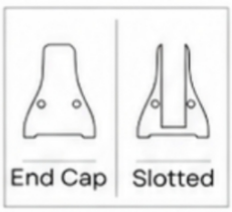

SAAF TRADING
9072 20 20 39

UV 07 - U Channel 30 X 40





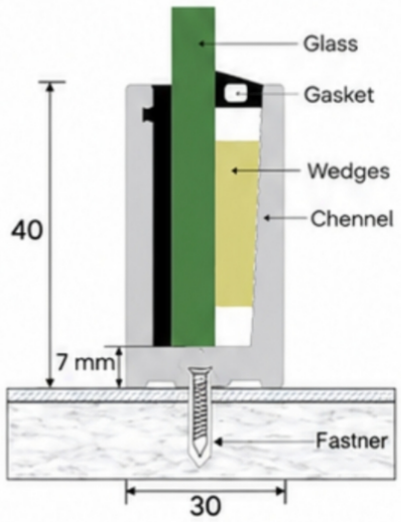

Product Details

- 100 % Recyclable
- Easy Cleaning
- Maintenance Free
- Weather Proof
- Robust for Higher Safety

Product Details

Size : 30 X 40 mm
Glass : 12 mm to 14 mm Glass
Length : 13Ft. / 16 Ft.
Weight : 650 Gm. (1 Feet)
Rubber Weight : 80 Gm. (1 Feet)
Finish : Mill Finish / Powder Coating / Anodized / Wooden

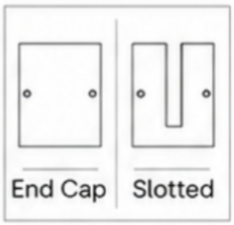

UV 08 - U Channel 58 X 32





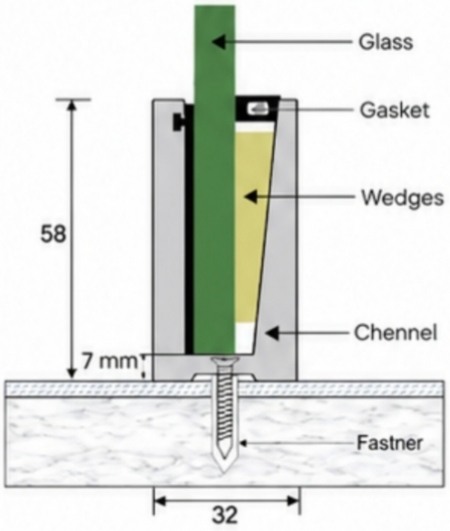

Product Details

- 100 % Recyclable
- Easy Cleaning
- Maintenance Free
- Weather Proof
- Robust for Higher Safety

Product Details

Size : 32 X 58 mm
Glass : 12 mm to 14 mm Glass
Length : 13Ft. / 16 Ft.
Weight : 650 Gm. (1 Feet)
Rubber Weight : 100 Gm. (1 Feet)
Finish : Mill Finish / Powder Coating / Anodized / Wooden

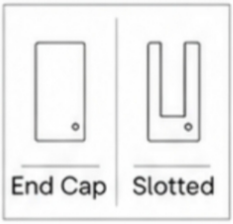

Aluminum Railing Bottom

SAAF TRADING
9072 20 20 39

UV 09 - U Channel 80 X 37





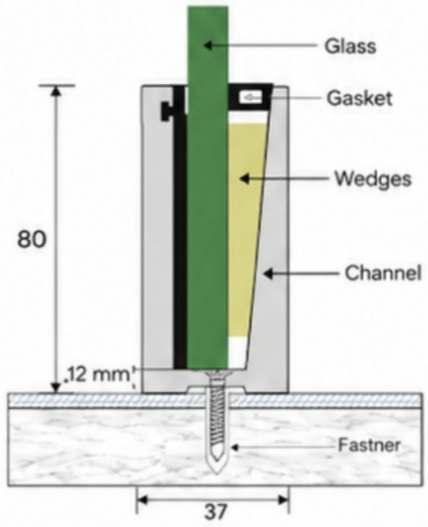

Product Details

- 100 % Recyclable
- Easy Cleaning
- Maintenance Free
- Weather Proof
- Robust for Higher Safety

Product Details

Size : 37 X 80 mm
Glass : 12 mm to 14 mm Glass
Length : 13Ft. / 16 Ft.
Weight : 950 Gm. (1 Feet)
Rubber Weight : 135 Gm. (1 Feet)
Finish : Mill Finish / Powder Coating / Anodized / Wooden

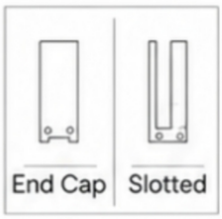

UV 10 - U Channel 100 X 37





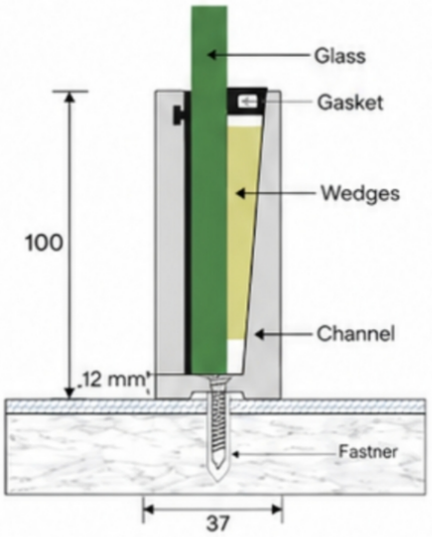

Product Details

- 100 % Recyclable
- Easy Cleaning
- Maintenance Free
- Weather Proof
- Robust for Higher Safety

Product Details

Size : 37 X 100 mm
Glass : 12 mm to 14 mm Glass
Length : 13Ft. / 16 Ft.
Weight : 1200 Gm. (1 Feet)
Rubber Weight : 175 Gm. (1 Feet)
Finish : Mill Finish / Powder Coating / Anodized / Wooden

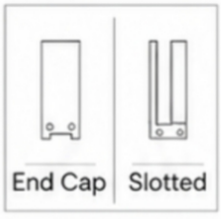

Aluminum Railing Bottom

SAAF TRADING
9072 20 20 39

UV 11 - U Channel 100 X 45





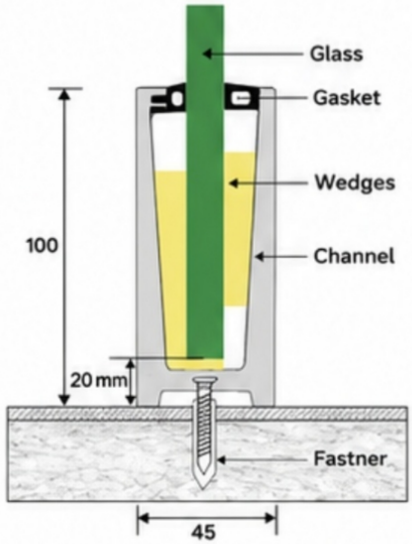

Product Details

- 100 % Recyclable
- Easy Cleaning
- Maintenance Free
- Weather Proof
- Robust for Higher Safety

Product Details

Size : 45 X 100 mm
Glass : 12 mm to 14 mm Glass
Length : 13Ft. / 16 Ft.
Weight : 1250 Gm. (1 Feet)
Rubber Weight : 100 Gm. (1 Feet)
Finish : Mill Finish / Powder Coating / Anodized / Wooden

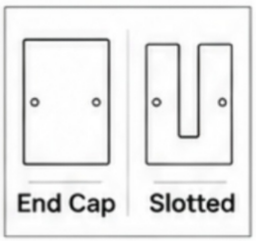

UV 12 - U Channel 115 X 41





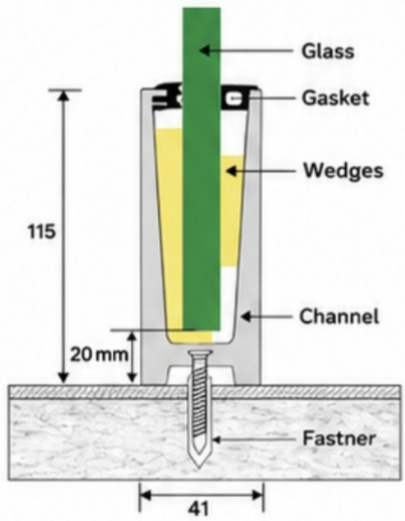

Product Details

- 100 % Recyclable
- Easy Cleaning
- Maintenance Free
- Weather Proof
- Robust for Higher Safety

Product Details

Size : 41 X 115 mm
Glass : 12 mm to 14 mm Glass
Length : 13Ft. / 16 Ft.
Weight : 1700 Gm. (1 Feet)
Rubber Weight : 100 Gm. (1 Feet)
Finish : Mill Finish / Powder Coating / Anodized / Wooden

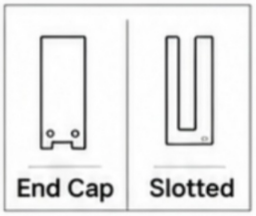

Aluminum Railing Bottom

SAAF TRADING
9072 20 20 39

UV 13 - U Channel 121 X 45





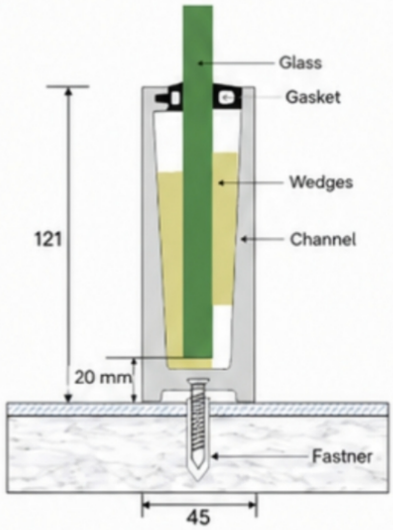

Product Details

- 100 % Recyclable
- Easy Cleaning
- Maintenance Free
- Weather Proof
- Robust for Higher Safety

Product Details

Size : 45 X 121 mm
Glass : 12 mm to 14 mm Glass
Length : 13Ft. / 16 Ft.
Weight : 1800 Gm. (1 Feet)
Rubber Weight : 100 Gm. (1 Feet)
Finish : Mill Finish / Powder Coating / Anodized / Wooden

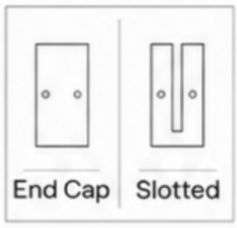

UV 14 - U Channel 58 X 32





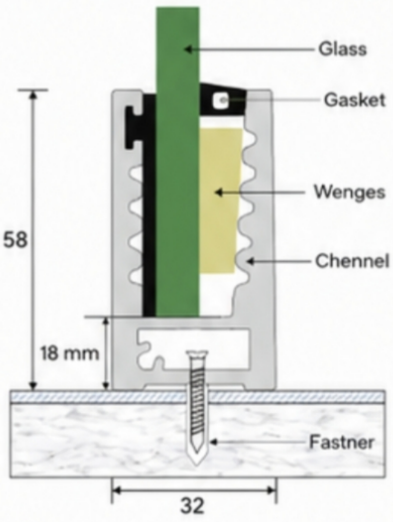

Product Details

- 100 % Recyclable
- Easy Cleaning
- Maintenance Free
- Weather Proof
- Robust for Higher Safety

Product Details

Size : 32 X 58 mm
Glass : 12 mm to 14 mm Glass
Length : 13Ft. / 16 Ft.
Weight : 650 Gm. (1 Feet)
Rubber Weight : 120 Gm. (1 Feet)
Finish : Mill Finish / Powder Coating / Anodized / Wooden

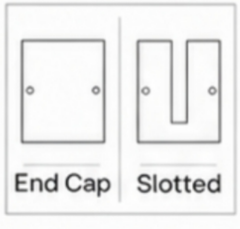

Aluminum Railing Bottom

SAAF TRADING
9072 20 20 39

UV 15 - U Channel 80 X 37

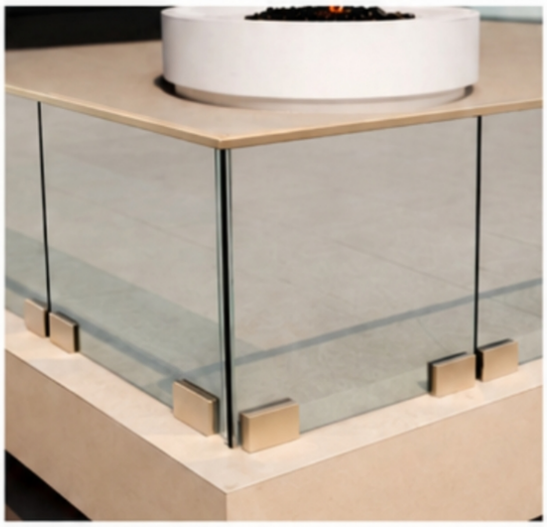



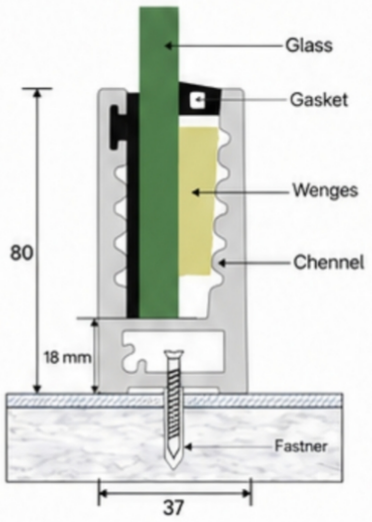

Product Details

- 100 % Recyclable
- Easy Cleaning
- Maintenance Free
- Weather Proof
- Robust for Higher Safety

Product Details

Size : 37 X 80 mm
Glass : 12 mm to 14 mm Glass
Length : 13Ft. / 16 Ft.
Weight : 900 Gm. (1 Feet)
Rubber Weight : 140 Gm. (1 Feet)
Finish : Mill Finish / Powder Coating / Anodized / Wooden

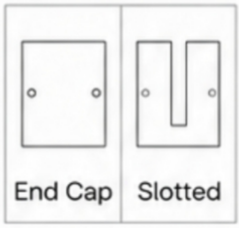

UV 16 - V Channel 55 X 36





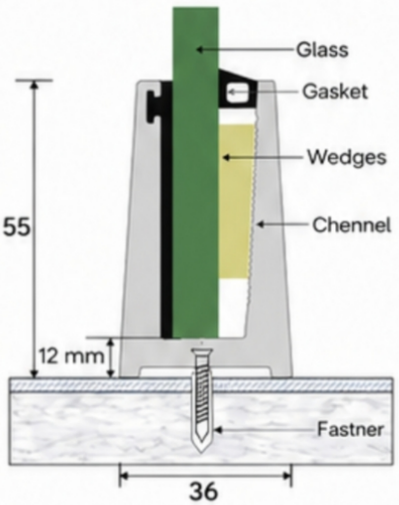

Product Details

- 100 % Recyclable
- Easy Cleaning
- Maintenance Free
- Weather Proof
- Robust for Higher Safety

Product Details

Size : 36 X 55 mm
Glass : 12 mm to 14 mm Glass
Length : 13Ft. / 16 Ft.
Weight : 700 Gm. (1 Feet)
Rubber Weight : 90 Gm. (1 Feet)
Finish : Mill Finish / Powder Coating / Anodized / Wooden

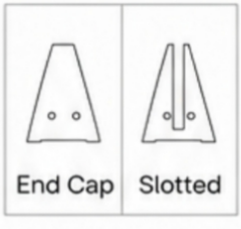

Aluminum Railing Bottom

SAAF TRADING
9072 20 20 39

UV 17 - V Channel 47 X 80





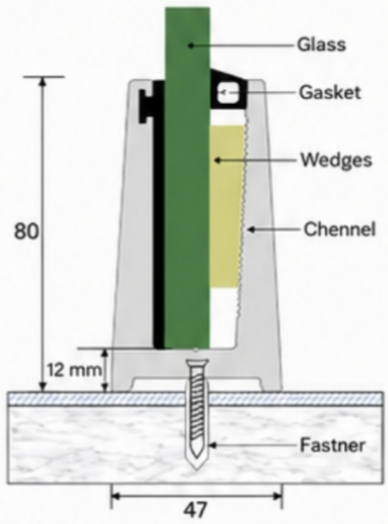

Product Details

- 100 % Recyclable
- Easy Cleaning
- Maintenance Free
- Weather Proof
- Robust for Higher Safety

Product Details

Size : 47 X 80 mm
Glass : 12 mm to 14 mm Glass
Length : 13Ft. / 16 Ft.
Weight : 1200 Gm. (1 Feet)
Rubber Weight : 140 Gm. (1 Feet)
Finish : Mill Finish / Powder Coating / Anodized / Wooden

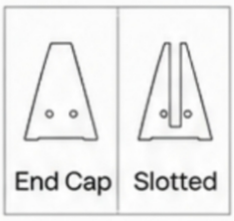

UV 18 - Bottom 82 X 65





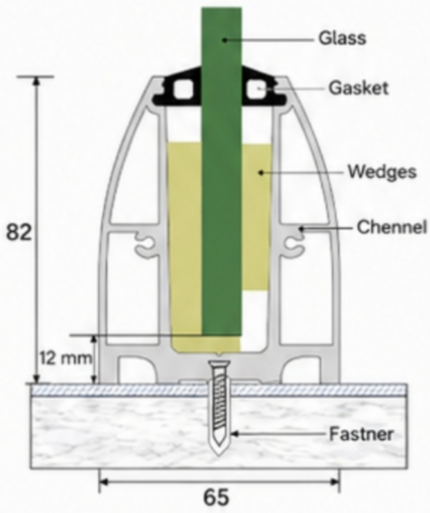

Product Details

- 100 % Recyclable
- Easy Cleaning
- Maintenance Free
- Weather Proof
- Robust for Higher Safety

Product Details

Size : 65 X 82 mm
Glass : 12 mm to 14 mm Glass
Length : 13Ft. / 16 Ft.
Weight : 900 Gm. (1 Feet)
Rubber Weight : 100 Gm. (1 Feet)
Finish : Mill Finish / Powder Coating / Anodized / Wooden

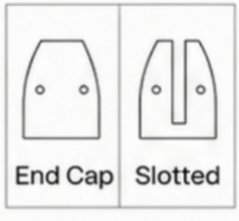

Aluminum Railing Bottom

SAAF TRADING
9072 20 20 39

UV 19 - New Modular 85 X 75





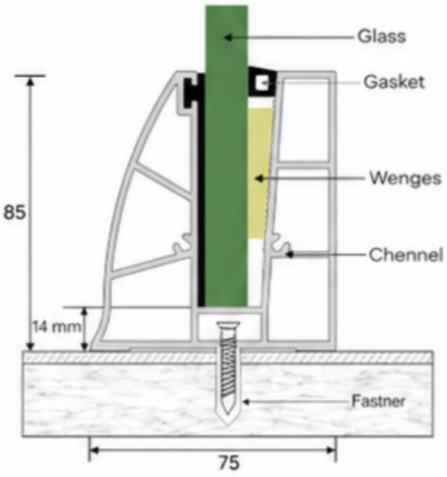

Product Details

- 100 % Recyclable
- Easy Cleaning
- Maintenance Free
- Weather Proof
- Robust for Higher Safety

Product Details

Size : 75 X 85 mm
Glass : 12 mm to 14 mm Glass
Length : 13Ft. / 16 Ft.
Weight : 730 Gm. (1 Feet)
Rubber Weight : 170 Gm. (1 Feet)
Finish : Mill Finish / Powder Coating / Anodized / Wooden

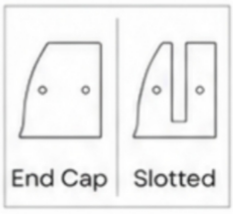

UV 20 - Bottom 75 X 60





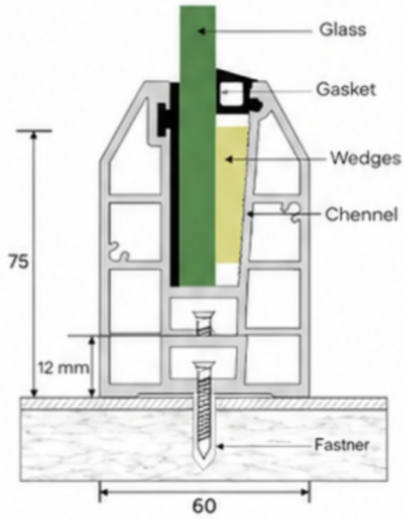

Product Details

- 100 % Recyclable
- Easy Cleaning
- Maintenance Free
- Weather Proof
- Robust for Higher Safety

Product Details

Size : 60 X 75 mm
Glass : 12 mm to 14 mm Glass
Length : 13Ft. / 16 Ft.
Weight : 950 Gm. (1 Feet)
Rubber Weight : 170 Gm. (1 Feet)
Finish : Mill Finish / Powder Coating / Anodized / Wooden

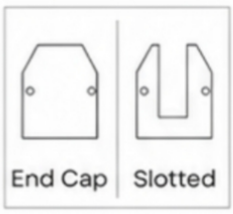

SAAF TRADING
9072 20 20 39

UV 21 - Bottom 75 X 50





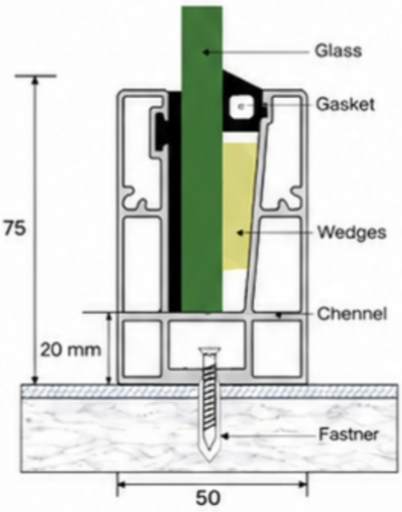

Product Details

- 100 % Recyclable
- Easy Cleaning
- Maintenance Free
- Weather Proof
- Robust for Higher Safety

Product Details

Size : 50 X 75 mm
Glass : 12 mm to 14 mm Glass
Length : 13Ft. / 16 Ft.
Weight : 700 Gm. (1 Feet)
Rubber Weight : 120 Gm. (1 Feet)
Finish : Mill Finish / Powder Coating / Anodized / Wooden

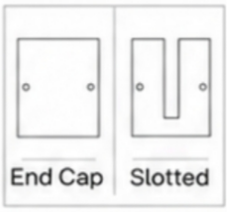

UV 22 - Bottom 50 X 90





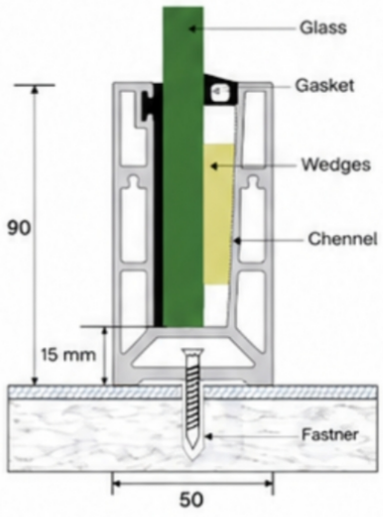

Product Details

- 100 % Recyclable
- Easy Cleaning
- Maintenance Free
- Weather Proof
- Robust for Higher Safety

Product Details

Size : 50 X 90 mm
Glass : 12 mm to 14 mm Glass
Length : 13Ft. / 16 Ft.
Weight : 950 Gm. (1 Feet)
Rubber Weight : 140 Gm. (1 Feet)
Finish : Mill Finish / Powder Coating / Anodized / Wooden

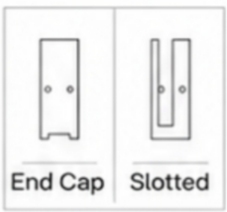

SAAF TRADING
9072 20 20 39

UV 23 -Bottom 50 X 90 Side LED



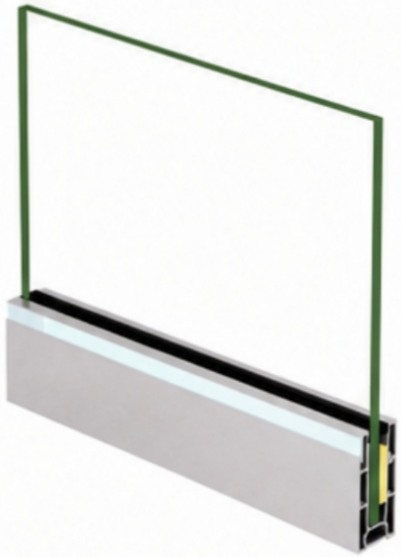

LED System

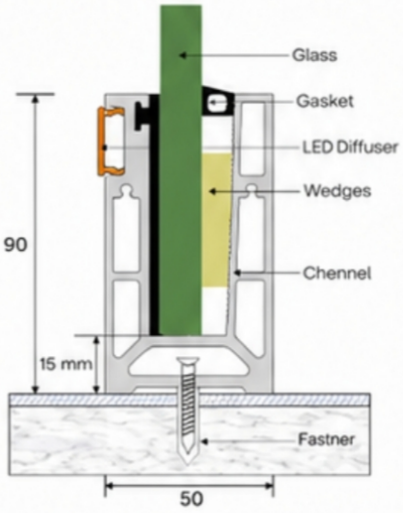

Product Details

- 100 % Recyclable
- Easy Cleaning
- Maintenance Free
- Weather Proof
- Robust for Higher Safety

Product Details

Size : 50 X 90 mm
Glass : 12 mm to 14 mm Glass
Length : 13Ft. / 16 Ft.
Weight : 1000 Gm. (1 Feet)
Rubber Weight : 140 Gm. (1 Feet)
Finish : Mill Finish / Powder Coating / Anodized / Wooden

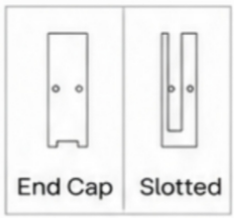

UV 24 - Bottom 90 X 60





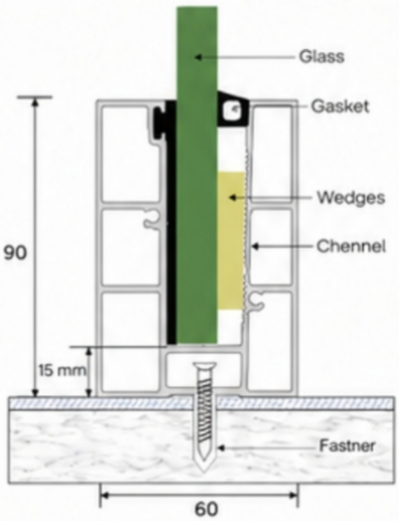

Product Details

- 100 % Recyclable
- Easy Cleaning
- Maintenance Free
- Weather Proof
- Robust for Higher Safety

Product Details

Size : 60 X 90 mm
Glass : 12 mm to 14 mm Glass
Length : 13Ft. / 16 Ft.
Weight : 900 Gm. (1 Feet)
Rubber Weight : 140 Gm. (1 Feet)
Finish : Mill Finish / Powder Coating / Anodized / Wooden

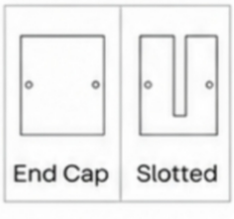

SAAF TRADING
9072 20 20 39

UV 25 - Bottom 100 X 55 Heavy





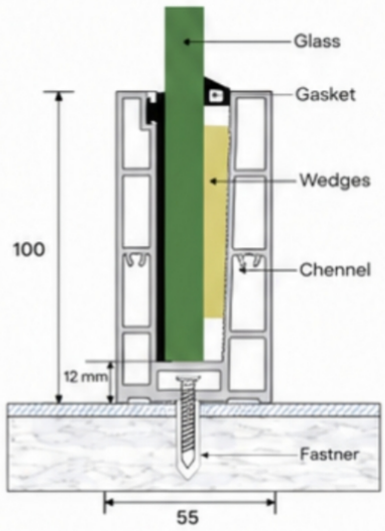

Product Details

- 100 % Recyclable
- Easy Cleaning
- Maintenance Free
- Weather Proof
- Robust for Higher Safety

Product Details

Size : 55 X 100 mm
Glass : 12 mm to 14 mm Glass
Length : 13Ft. / 16 Ft.
Weight : 1150 Gm. (1 Feet)
Rubber Weight : 175 Gm. (1 Feet)
Finish : Mill Finish / Powder Coating / Anodized / Wooden

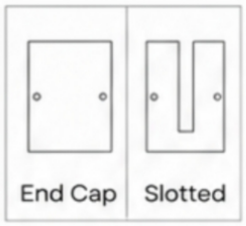

UV 26 - Bottom 105 X 60 Heavy





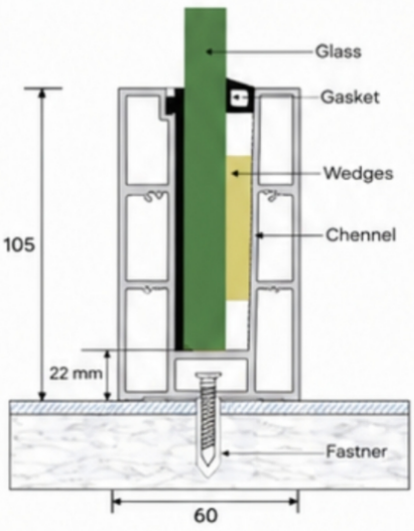

Product Details

- 100 % Recyclable
- Easy Cleaning
- Maintenance Free
- Weather Proof
- Robust for Higher Safety

Product Details

Size : 60 X 105 mm
Glass : 12 mm to 14 mm Glass
Length : 13Ft. / 16 Ft.
Weight : 1200 Gm. (1 Feet)
Rubber Weight : 100 Gm. (1 Feet)
Finish : Mill Finish / Powder Coating / Anodized / Wooden

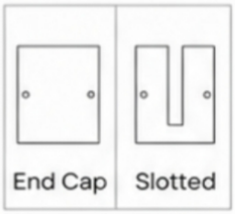

Aluminum Railing Bottom

SAAF TRADING
9072 20 20 39

UV 27 -Bottom 120 X 60 Heavy





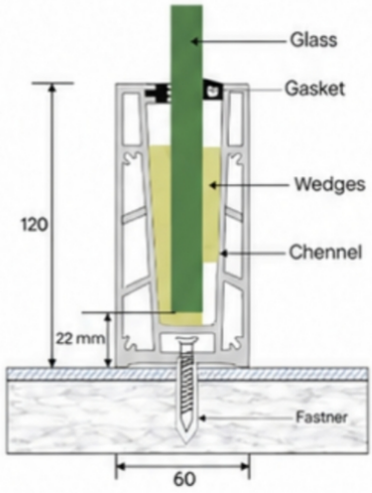

Product Details

- 100 % Recyclable
- Easy Cleaning
- Maintenance Free
- Weather Proof
- Robust for Higher Safety

Product Details

Size : 60 X 120 mm
Glass : 12 mm to 14 mm Glass
Length : 13Ft. / 16 Ft.
Weight : 1500 Gm. (1 Feet)
Rubber Weight : 100 Gm. (1 Feet)
Finish : Mill Finish / Powder Coating / Anodized / Wooden

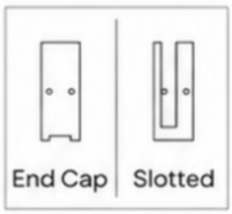

UV 28 - Bottom 108 X 55 Heavy





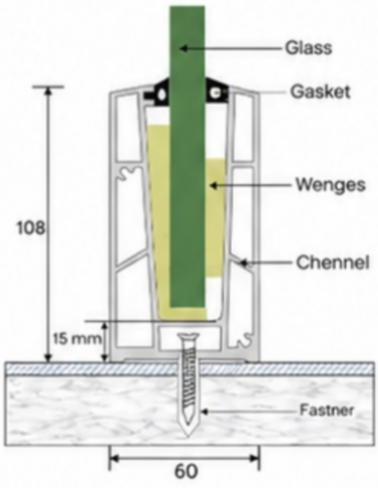

Product Details

- 100 % Recyclable
- Easy Cleaning
- Maintenance Free
- Weather Proof
- Robust for Higher Safety

Product Details

Size : 60 X 108 mm
Glass : 12 mm to 14 mm Glass
Length : 13Ft. / 16 Ft.
Weight : 1300 Gm. (1 Feet)
Rubber Weight : 100 Gm. (1 Feet)
Finish : Mill Finish / Powder Coating / Anodized / Wooden

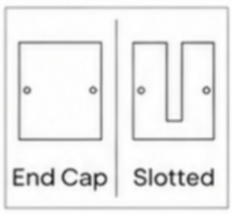

Aluminum Railing Bottom

SAAF TRADING
9072 20 20 39

UV 29 - Bottom 100 X 60 Heavy





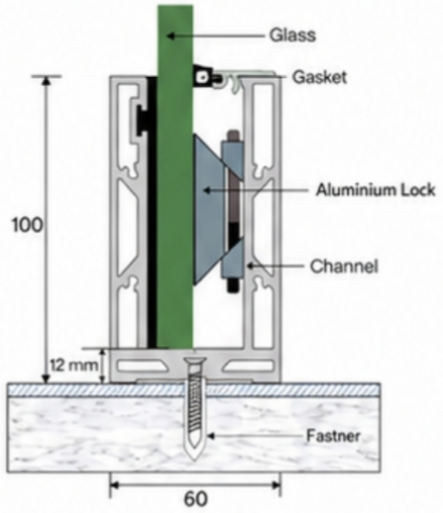

Product Details

- 100 % Recyclable
- Easy Cleaning
- Maintenance Free
- Weather Proof
- Robust for Higher Safety

Product Details

Size : 60 X 100 mm
Glass : 12 mm to 14 mm Glass
Length : 13Ft. / 16 Ft.
Weight : 1300 Gm. (1 Feet)
Rubber Weight : 130 Gm. (1 Feet)
Finish : Mill Finish / Powder Coating / Anodized / Wooden

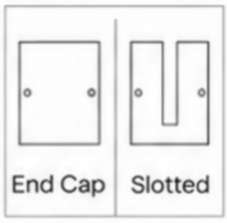

UV 30 - Bottom 125 X 70 Heavy





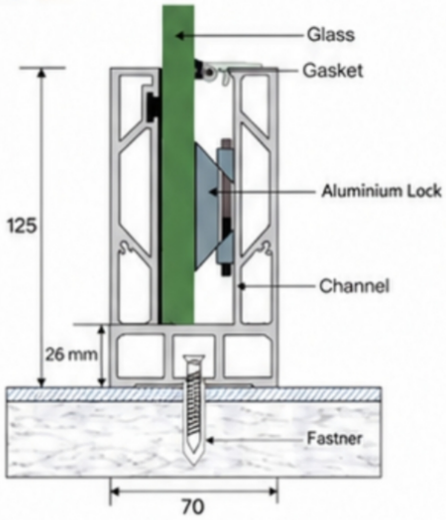

Product Details

- 100 % Recyclable
- Easy Cleaning
- Maintenance Free
- Weather Proof
- Robust for Higher Safety

Product Details

Size : 70 X 125 mm
Glass : 12 mm to 19 mm Glass
Length : 13Ft. / 16 Ft.
Weight : 1800 Gm. (1 Feet)
Rubber Weight : 150 Gm. (1 Feet)
Finish : Mill Finish / Powder Coating / Anodized / Wooden

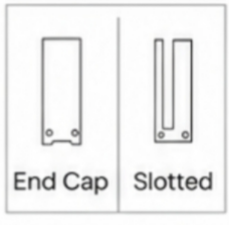

Aluminum Railing Bottom

SAAF TRADING
9072 20 20 39

UV 31 - Bottom 150 X 70





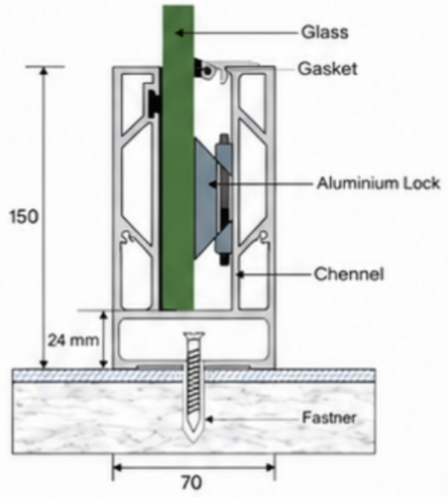

Product Details

- 100 % Recyclable
- Easy Cleaning
- Maintenance Free
- Weather Proof
- Robust for Higher Safety

Product Details

Size : 70 X 150 mm
Glass : 12 mm to 19 mm Glass
Length : 13Ft. / 16 Ft.
Weight : 2000 Gm. (1 Feet)
Rubber Weight : 175 Gm. (1 Feet)
Finish : Mill Finish / Powder Coating / Anodized / Wooden

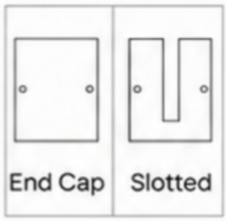

UV 32 - Bottom 140 X 90 Heavy





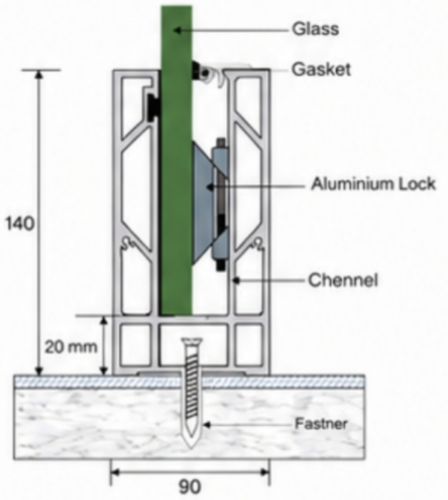

Product Details

- 100 % Recyclable
- Easy Cleaning
- Maintenance Free
- Weather Proof
- Robust for Higher Safety

Product Details

Size : 90 X 140 mm
Glass : 12 mm to 24 mm Glass
Length : 13Ft. / 16 Ft.
Weight : 2400 Gm. (1 Feet)
Rubber Weight : 175 Gm. (1 Feet)
Finish : Mill Finish / Powder Coating / Anodized / Wooden

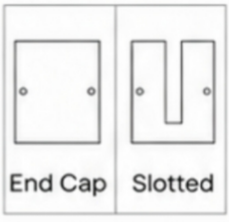

SAAF TRADING
9072 20 20 39

UV 33 - Bottom 110 X 81 Heavy



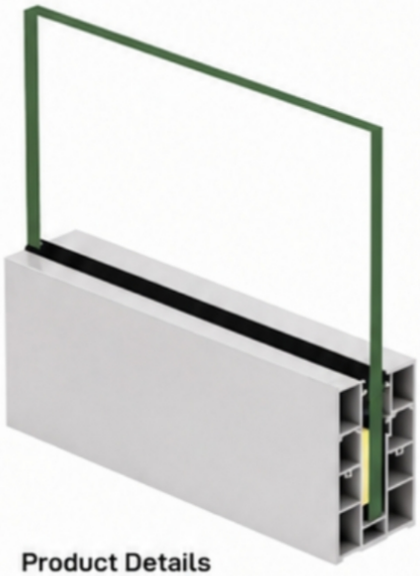

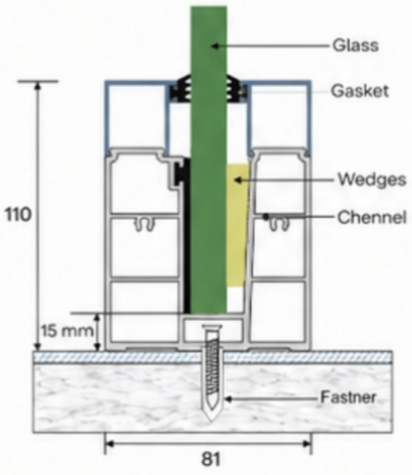

Product Details

- 100 % Recyclable
- Easy Cleaning
- Maintenance Free
- Weather Proof
- Robust for Higher Safety

Product Details

Size : 81 X 110 mm
Glass : 12 mm to 14 mm Glass
Length : 13Ft. / 16 Ft.
Weight : 1100 Gm. (1 Feet)
Rubber Weight : 120 Gm. (1 Feet)
Finish : Mill Finish / Powder Coating / Anodized / Wooden

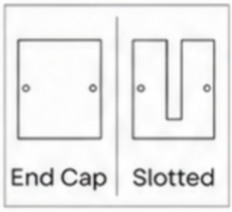

UV 34 - Bottom 110 X 81 2-Side LED



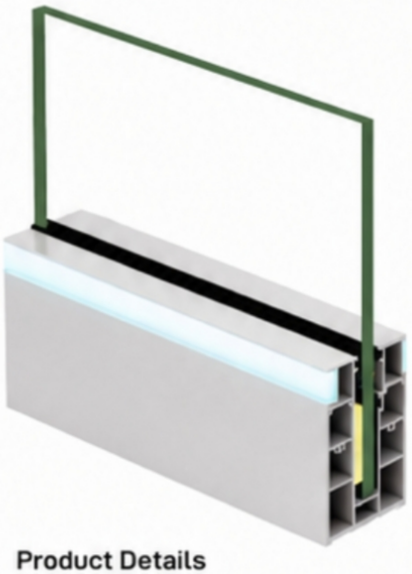

LED System

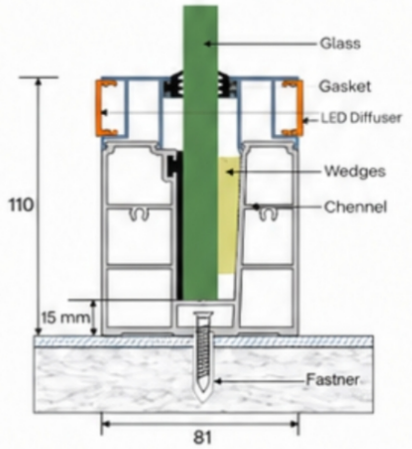

Product Details

- 100 % Recyclable
- Easy Cleaning
- Maintenance Free
- Weather Proof
- Robust for Higher Safety

Product Details

Size : 81 X 110 mm
Glass : 12 mm to 14 mm Glass
Length : 13Ft. / 16 Ft.
Weight : 1100 Gm. (1 Feet)
Rubber Weight : 120 Gm. (1 Feet)
Finish : Mill Finish / Powder Coating / Anodized / Wooden

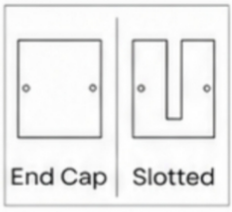

SAAF TRADING
9072 20 20 39

UV 35 - Bottom 110 X 81 2-Side LED

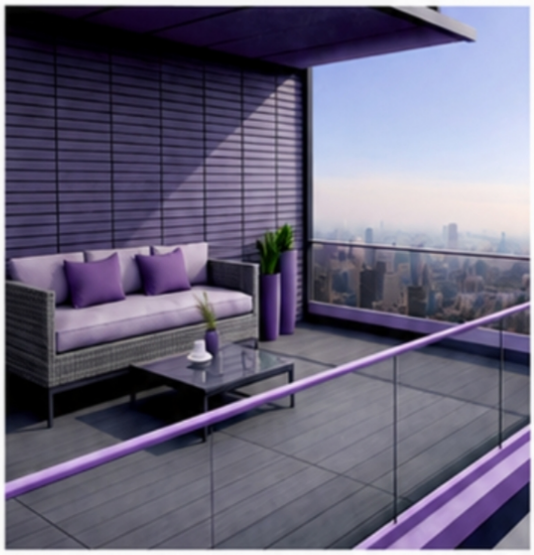

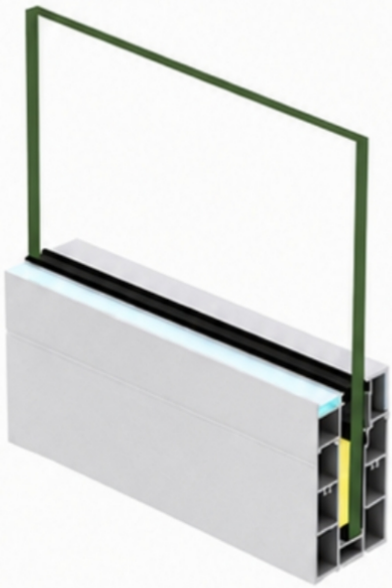

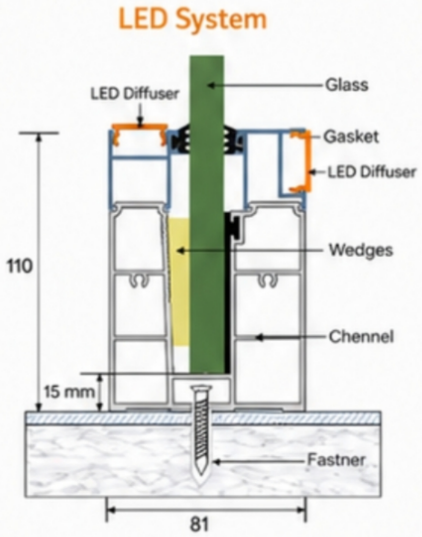

Product Details

- 100 % Recyclable
- Easy Cleaning
- Maintenance Free
- Weather Proof
- Robust for Higher Safety

Product Details

Size : 81 X 110 mm
Glass : 12 mm to 14 mm Glass
Length : 13Ft. / 16 Ft.
Weight : 1100 Gm. (1 Feet)
Rubber Weight : 120 Gm. (1 Feet)
Finish : Mill Finish / Powder Coating / Anodized / Wooden

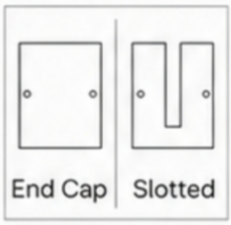

UV 36 - Bottom 110 X 81 2-Side LED



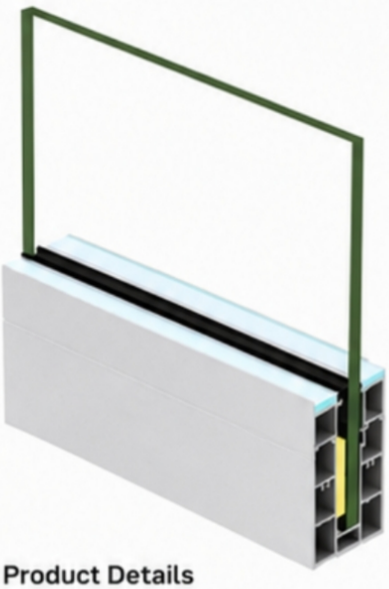

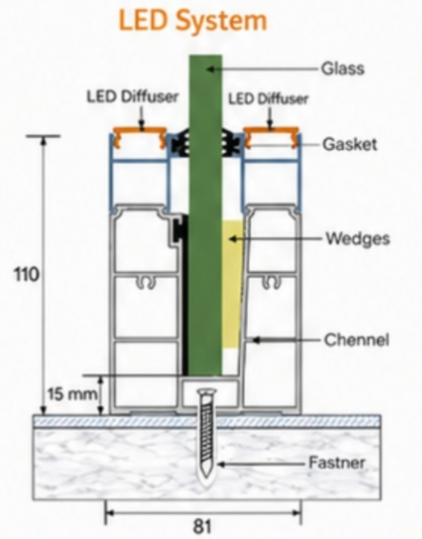

Product Details

- 100 % Recyclable
- Easy Cleaning
- Maintenance Free
- Weather Proof
- Robust for Higher Safety

Product Details

Size : 81 X 110 mm
Glass : 12 mm to 14 mm Glass
Length : 13Ft. / 16 Ft.
Weight : 1100 Gm. (1 Feet)
Rubber Weight : 120 Gm. (1 Feet)
Finish : Mill Finish / Powder Coating / Anodized / Wooden

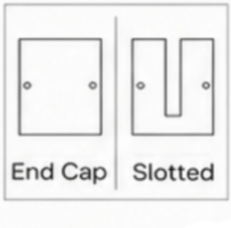

SAAF TRADING
9072 20 20 39

UV 37 - Side Mounting System



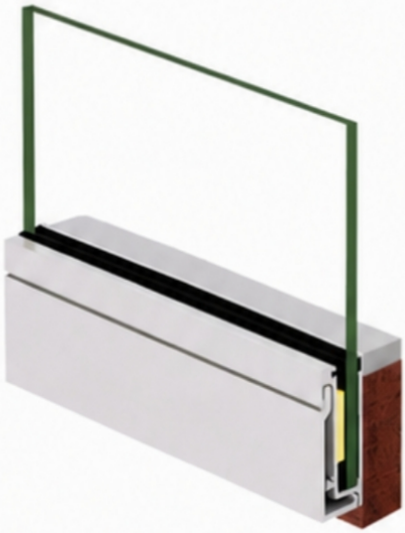

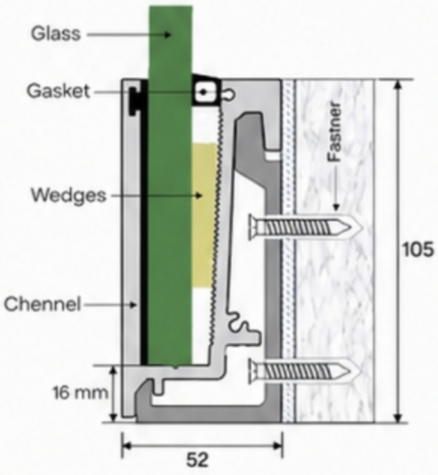

Product Details

- 100 % Recyclable
- Easy Cleaning
- Maintenance Free
- Weather Proof
- Robust for Higher Safety

Product Details

Size : 52 X 150 mm
Glass : 12 mm to 14 mm Glass
Length : 13Ft. / 16 Ft.
Weight : 1900 Gm. (1 Feet)
Rubber Weight : 140 Gm. (1 Feet)
Finish : Mill Finish / Powder Coating / Anodized / Wooden

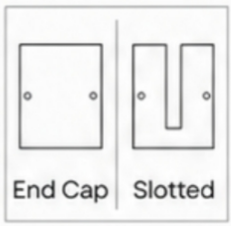

UV 38 - New Channel 80 X 37





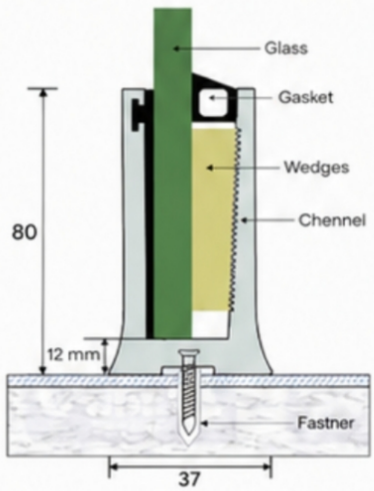

Product Details

- 100 % Recyclable
- Easy Cleaning
- Maintenance Free
- Weather Proof
- Robust for Higher Safety

Product Details

Size : 37 X 80 mm
Glass : 12 mm to 14 mm Glass
Length : 13Ft. / 16 Ft.
Weight : 950 Gm. (1 Feet)
Rubber Weight : 140 Gm. (1 Feet)
Finish : Mill Finish / Powder Coating / Anodized / Wooden

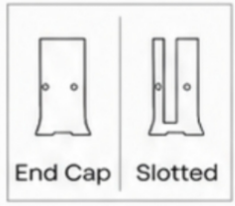

SAAF TRADING
9072 20 20 39

UV 39 - Continues Bottom 110 X 83





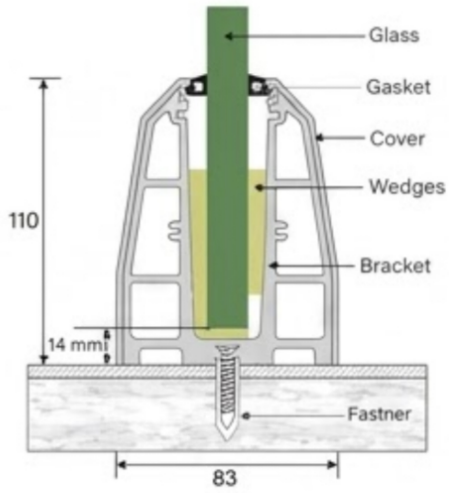

Product Details

- 100 % Recyclable
- Easy Cleaning
- Maintenance Free
- Weather Proof
- Robust for Higher Safety

Product Details

Size : 110 X 83 mm
Glass : 12 mm to 14 mm Glass
Length : 13Ft. / 16 Ft.
Weight : 1430 Gm. (1 Feet)
Rubber Weight : 200 Gm. (1 Feet)
Finish : Mill Finish / Powder Coating / Anodized / Wooden

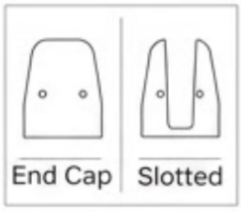

UV 40 - Triangle Big Ferry 100 X 80





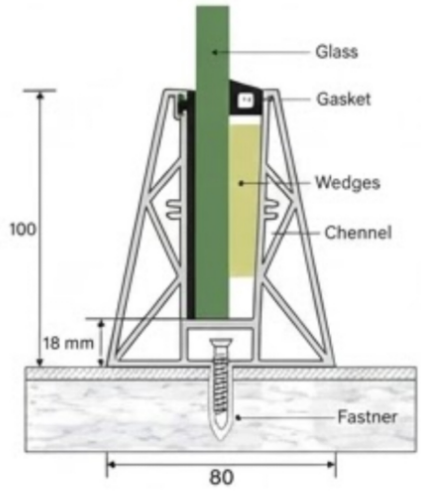

Product Details

- 100 % Recyclable
- Easy Cleaning
- Maintenance Free
- Weather Proof
- Robust for Higher Safety

Product Details

Size : 80 X 100 mm
Glass : 12 mm to 14 mm Glass
Length : 13Ft. / 16 Ft.
Weight : 1200 Gm. (1 Feet)
Rubber Weight : 170 Gm. (1 Feet)
Finish : Mill Finish / Powder Coating / Anodized / Wooden

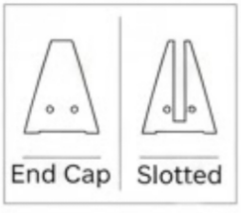

SAAF TRADING
9072 20 20 39

UV 41 - Modular Big Ferry 85 X 64





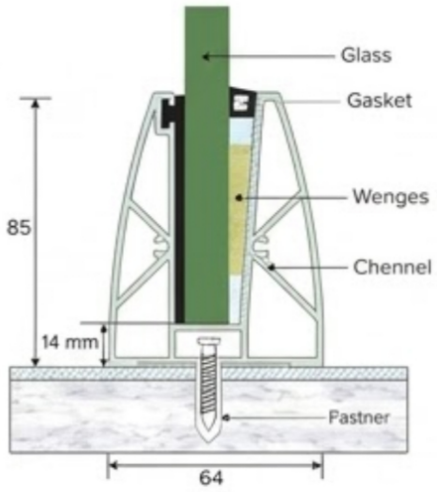

Product Details

- 100 % Recyclable
- Easy Cleaning
- Maintenance Free
- Weather Proof
- Robust for Higher Safety

Product Details

Size : 64 X 85 mm
Glass : 12 mm to 14 mm Glass
Length : 13ft . / 16 Ft.
Weight : 900 Cm. (1 Feet)
Rubber Weight : 170 Gm. (1 Feet)
Finish : Mill Finish / Powder Coating / Anodized / Wooden

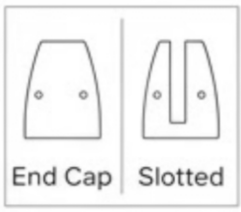



SAAF TRADING
9072 20 20 39

UV 42 - Step Bracket Cover





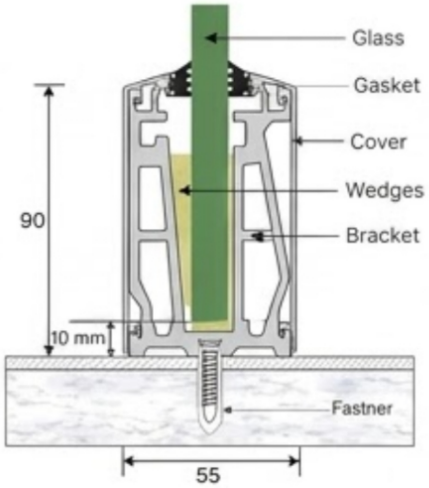

Product Details

- 100 % Recyclable
- Easy Cleaning
- Maintenance Free
- Weather Proof
- Robust for Higher Safety

Product Details

Size : 55 X 90 mm
Glass : 12 mm to 14 mm Glass
Length : 13Ft. / 16 Ft.
Weight : 160 Gm. (1 Feet) One Side Cover (Bracket 65 mm 240 Gm.)
Rubber Weight : 50 Gm. (1 Feet)
Finish : Mill Finish / Powder Coating / Anodized / Wooden

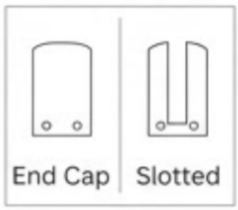

UV 43 - Step Bracket Cover





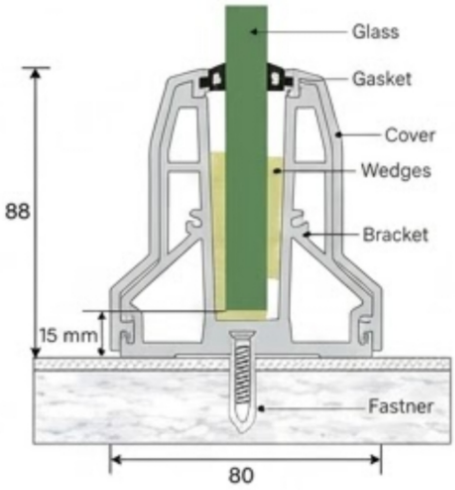

Product Details

- 100 % Recyclable
- Easy Cleaning
- Maintenance Free
- Weather Proof
- Robust for Higher Safety

Product Details

Size : 80 X 88 mm
Glass : 12 mm to 14 mm Glass
Length : 13Ft. / 16 Ft.
Weight : 175 Gm. (1 Feet) One Side Cover (Bracket 65 mm 230 Gm.)
Rubber Weight : 60 Gm. (1 Feet)
Finish : Mill Finish / Powder Coating / Anodized / Wooden

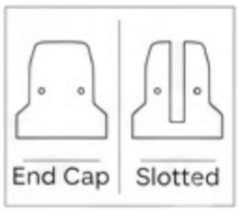

SAAF TRADING
9072 20 20 39

UV 44 - Step Bracket Cover

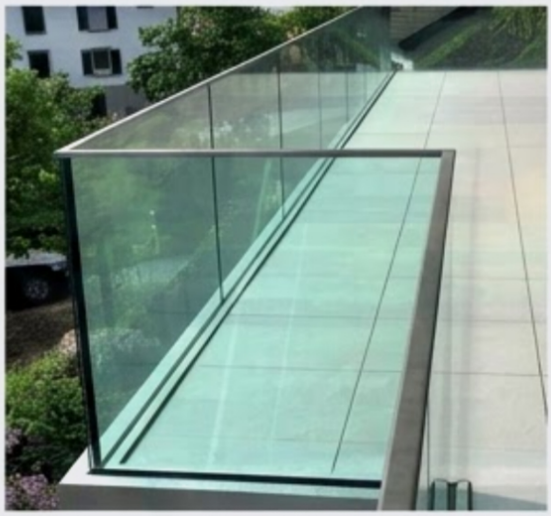



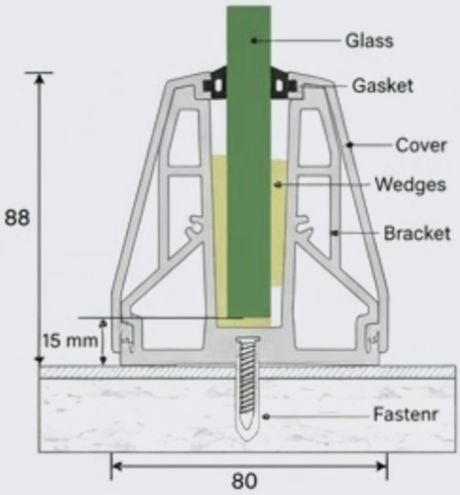

Product Details

- 100 % Recyclable
- Easy Cleaning
- Maintenance Free
- Weather Proof
- Robust for Higher Safety

Product Details

Size : 80 X 88 mm
Glass : 12 mm to 14 mm Glass
Length : 13Ft. / 16 Ft.
Weight : 175 Gm. (1 Feet) One Side Cover (Bracket 65 mm 230 Gm.)
Rubber Weight : 60 Gm. (1 Feet)
Finish : Mill Finish / Powder Coating / Anodized / Wooden



UV 45 - Step Bracket Cover





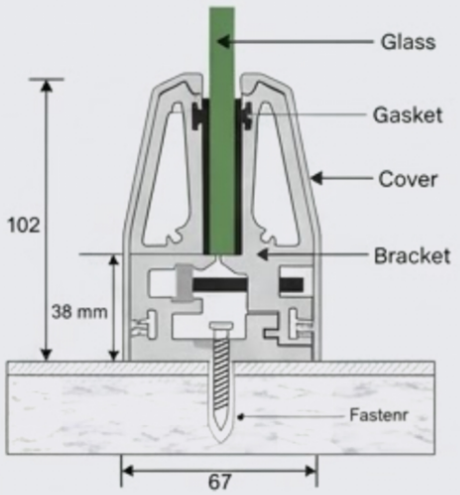

Product Details

- 100 % Recyclable
- Easy Cleaning
- Maintenance Free
- Weather Proof
- Robust for Higher Safety

Product Details

Size : 67 X 102 mm
Glass : 12 mm to 14 mm Glass
Length : 13Ft. / 16 Ft.
Weight : 220 Gm. (1 Feet) One Side Cover (Bracket 65 mm 500 Gm.)
Finish : Mill Finish / Powder Coating / Anodized / Wooden

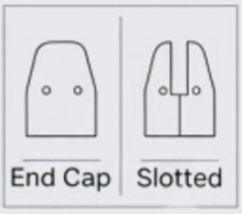

SAAF TRADING
9072 20 20 39

UV 46 - Step Bracket Cover





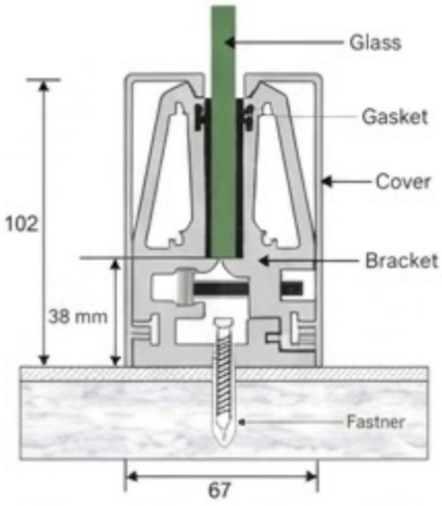

Product Details

- 100 % Recyclable
- Easy Cleaning
- Maintenance Free
- Weather Proof
- Robust for Higher Safety

Product Details

Size : 67 X 102 mm
Glass : 12 mm to 14 mm Glass
Length : 13Ft. / 16 Ft.
Weight : 260 Gm. (1 Feet) One Side Cover (Bracket 65 mm 500 Gm.)
Finish : Mill Finish / Powder Coating / Anodized / Wooden

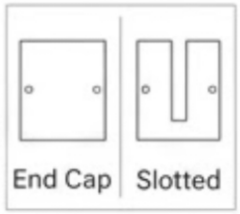

UV 47 - Step Bracket Cover





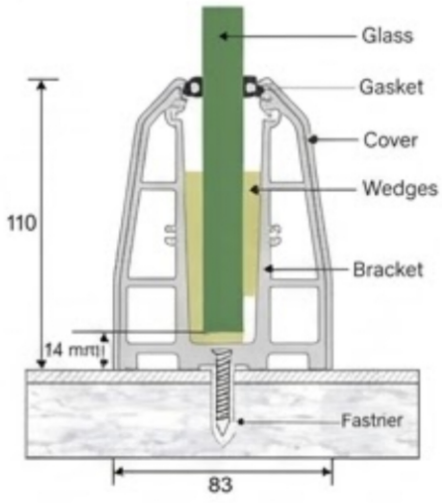

Product Details

- 100 % Recyclable
- Easy Cleaning
- Maintenance Free
- Weather Proof
- Robust for Higher Safety

Product Details

Size : 83 X 110 mm
Glass : 12 mm to 14 mm Glass
Length : 13Ft. / 16 Ft.
Weight : 180 Gm. (1 Feet) One Side Cover (Bracket 65 mm 375 Gm.)
Finish : Mill Finish / Powder Coating / Anodized / Wooden

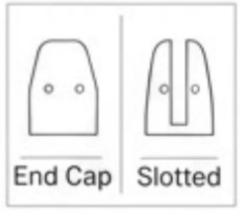

SAAF TRADING
9072 20 20 39

UV 48 - Step Bracket Cover





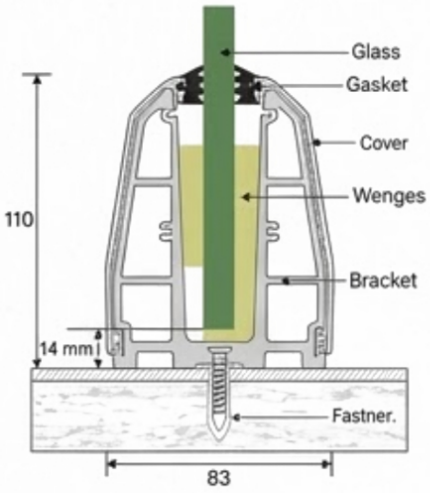

Product Details

- 100 % Recyclable
- Easy Cleaning
- Maintenance Free
- Weather Proof
- Robust for Higher Safery

Product Details

Size : 83 X 110 mm
Glass : 12 mm to 14 mm Glass
Length : 13ft. / 16 Ft.
Weight : 180 Gm. (1 Feet) One Side Cover (Bracket 65 mm 375 Gm.)
Rubber Weight : 60 Gm. (1 Feet)
Finish : Mill Finish / Powder Coating / Anodized / Wooden

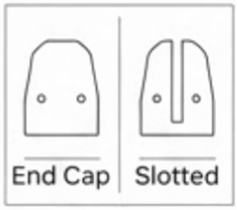

UV 49 - Step Bracket Cover





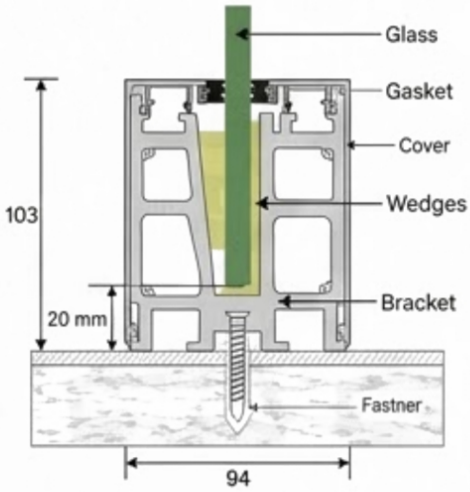

Product Details

- 100 % Recyclable
- Easy Cleaning
- Maintenance Free
- Weather Proof
- Robust for Higher Safety

Product Details

Size : 94 X 103 mm
Glass : 12 mm to 14 mm Glass
Length : 13Ft. / 16 Ft.
Weight : 260 Gm. (1 Feet) One Side Cover (Bracket 65 mm 475 Gm.)
Rubber Weight : 60 Gm. (1 Feet)
Finish : Mill Finish / Powder Coating / Anodized / Wooden

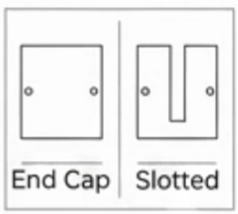

Aluminum Bracket With Cover Profile

SAAF TRADING
9072 20 20 39

UV 50 - Step Bracket Cover





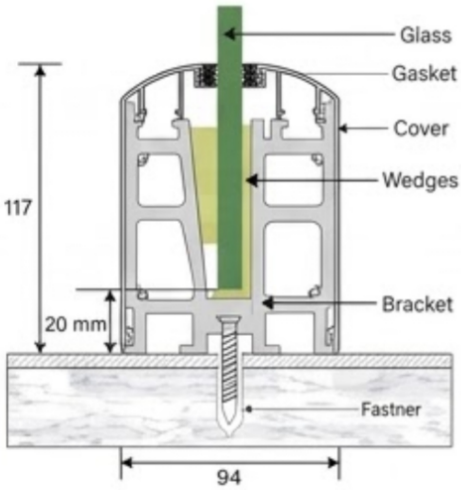

Product Details

- 100 % Recyclable
- Easy Cleaning
- Maintenance Free
- Weather Proof
- Robust for Higher Safety

Product Details

Size : 94 X 117 mm
Glass : 12 mm to 14 mm Glass
Length : 13Ft. / 16 Ft.
Weight : 230 Gm. (1 Feet) One Side Cover (Bracket 65 mm 475 Gm.)
Rubber Weight : 60 Gm. (1 Feet)
Finish : Mill Finish / Powder Coating / Anodized / Wooden

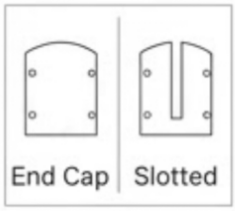



SAAF TRADING
9072 20 20 39

UV 51 - Regular Ferry Bracket





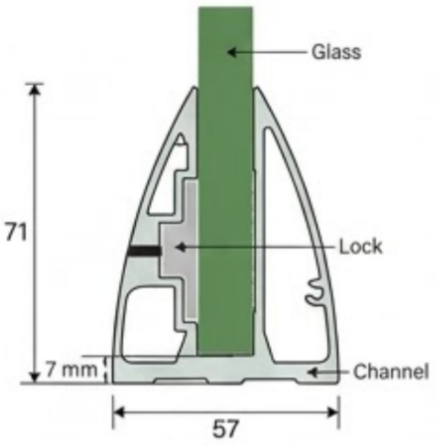

Product Details

- 100 % Recyclable
- Easy Cleaning
- Maintenance Free
- Weather Proof
- Robust for Higher Safety

Product Details

Size : 57 X 71 mm
Glass : 12 mm Glass
Width : 75 mm
Finish : Mill Finish / Powder Coating / Anodized / Wooden

UV 52 - Clip Ferry Bracket





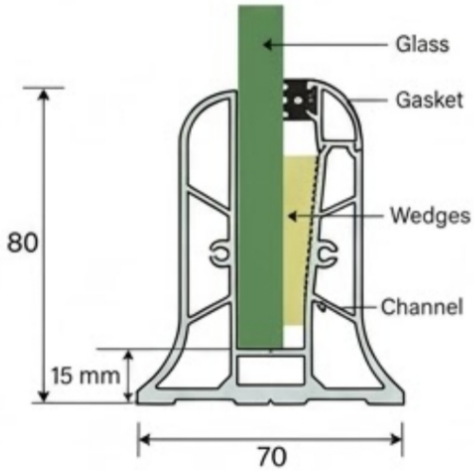

Product Details

- 100 % Recyclable
- Easy Cleaning
- Maintenance Free
- Weather Proof
- Robust for Higher Safety

Product Details

Size : 70 X 80 mm
Glass : 12 mm Glass
Width : 75 mm
Finish : Mili Finish / Powder Coating / Anodized / Wooden

SAAF TRADING
9072 20 20 39

UV 53- 50x90 Bottom Bracket





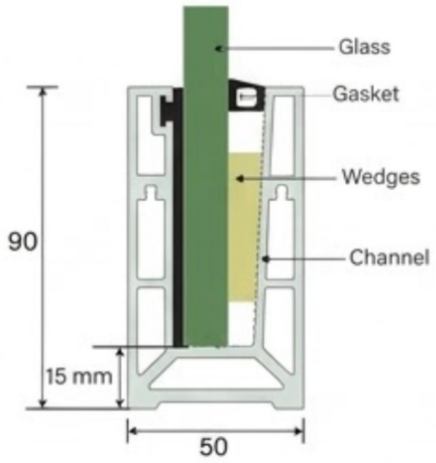

Product Details

- 100 % Recyclable
- Easy Cleaning
- Maintenance Free
- Weather Proof
- Robust for Higher Safety

Product Details

Size : 50 X 90 mm
Glass : 12 mm Glass
Width : 75 mm
Finish : Mill Finish / Powder Coating / Anodized / Wooden

UV 54 - 100x55 Bottom Bracket





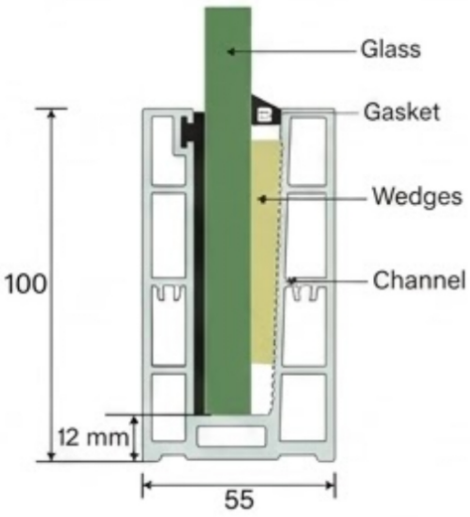

Product Details

- 100 % Recyclable
- Easy Cleaning
- Maintenance Free
- Weather Proof
- Robust for Higher Safety

Product Details

Size : 55 X 100 mm
Glass : 12 mm Glass
Width : 75 mm
Finish : Mill Finish / Powder Coating / Anodized / Wooden

SAAF TRADING
9072 20 20 39

UV 55- Step Bracket





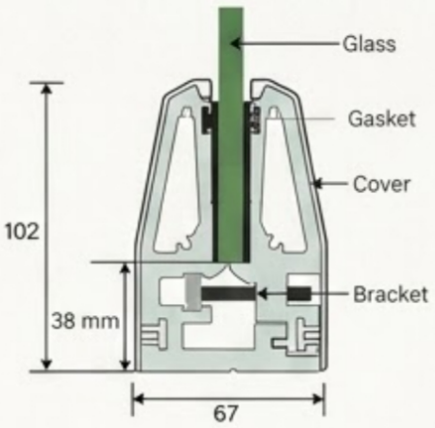

Product Details

- 100 % Recyclable
- Easy Cleaning
- Maintenance Free
- Weather Proof
- Robust for Higher Safery

Product Details

Size : 67 X 102 mm
Glass : 12 mm Glass
Width : 65 mm
Finish : Mill Finish / Powder Coating / Anodized / Wooden

UV 56 - Step Bracket





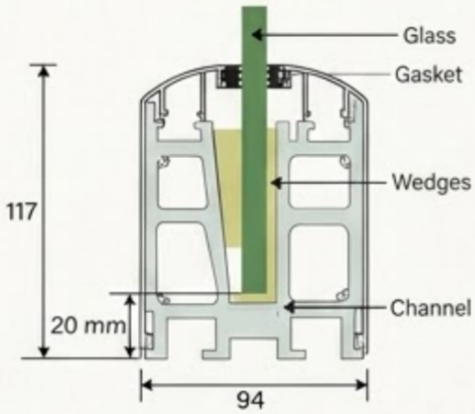

Product Details

- 100 % Recyclable
- Easy Cleaning
- Maintenance Free
- Weather Proof
- Robust for Higher Safety

Product Details

Size : 94 X 117 mm
Glass : 12 mm Glass
Width : 75 mm
Finish : Mill Finish / Powder Coating / Anodized / Wooden

SAAF TRADING
9072 20 20 39

UV 57- 125x70 Bottom Bracket





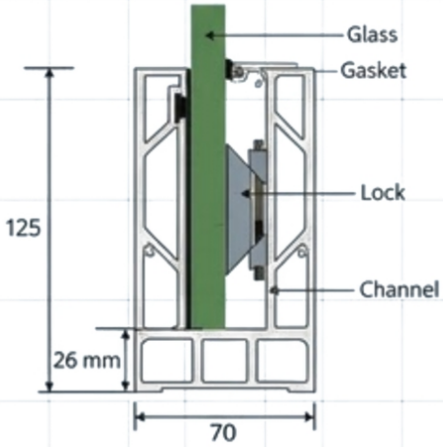

Product Details

- 100 % Recyclable
- Easy Cleaning
- Maintenance Free
- Weather Proof
- Robust for Higher Safety

Product Details

Size	: 70 X 125 mm
Glass	: 12 mm Glass
Width	: 75 mm
Finish	: Mill Finish / Powder Coating / Anodized / Wooden

UV 58 - Heavy Bracket





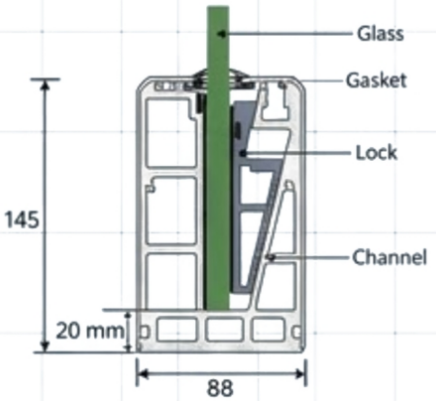

Product Details

- 100 % Recyclable
- Easy Cleaning
- Maintenance Free
- Weather Proof
- Robust for Higher Safety

Product Details

Size	: 88 X 125 mm
Glass	: 12 mm Glass
Width	: 75 mm
Finish	: Mill Finish / Powder Coating / Anodized / Wooden

SAAF TRADING
9072 20 20 39

UV 59- Anchor Fastener



Product Details

- 100 % Recyclable
- Easy Cleaning
- Maintenance Free
- Weather Proof
- Robust for Higher Safety



Aluminum Hand Rail

SAAF TRADING
9072 20 20 39



UV 101 - 65 mm Round

Size : 65 mm Round
Weight : 450 Gm. (1 Feet)
Length : 13 Ft. / 16 Ft.
Rubber : 120 Gm. (1 Feet)



UV 102 - 50 mm Round

Size : 50 mm Round
Weight : 310 Gm. (1 Feet)
Length : 13 Ft. / 16 Ft.
Rubber : 90 Gm. (1 Feet)



UV 103 - 38 mm Round

Size : 38 mm Round
Weight : 190 Gm. (1 Feet)
Length : 13 Ft. / 16 Ft.
Rubber : 90 Gm. (1 Feet)



UV 104 - 50 X 30 mm Square

Size : 50 X 50 mm Square
Weight : 350 Gm. (1 Feet)
Length : 13 Ft. / 16 Ft.
Rubber : 120 Gm. (1 Feet)



UV 105 - 40 X 40 Square

Size : 40 X 40 mm Square
Weight : 250 Gm. (1 Feet)
Length : 13 Ft. / 16 Ft.
Rubber : 90 Gm. (1 Feet)



UV 106 - 30 X 55 mm Rectangle

Size : 30 X 55 mm (Rectangle)
Weight : 300 Gm. (1 Feet)
Length : 13 Ft. / 16 Ft.
Rubber : 60 Gm. (1 Feet)



UV 107 - 32 X 32 Square

Size : 32 X 22 mm Square
Weight : 180 Gm. (1 Feet)
Length : 13 Ft. / 16 Ft.
Rubber : 90 Gm. (1 Feet)



UV 108 - 25 X 25 mm Square

Size : 25 X 25 mm Square
Weight : 170 Gm. (1 Feet)
Length : 13 Ft. / 16 Ft.
Rubber : 60 Gm. (1 Feet)



UV 100 - 60 X 40 mm Square

Size : 60 X 40 mm
Weight : 400 Gm. (1 Feet)
Length : 13 Ft. / 16 Ft.
Rubber : 90 Gm. (1 Feet)



UV 110 - 70 x 30 mm Square without LED

Size : 70 X 30 mm
Weight : 340 Gm. (1 Feet)
Length : 13 Ft. / 16 Ft.
Rubber : 90 Gm. (1 Feet)



UV 111 - 60 X 40 Octagon

Size : 60 X 40 mm (Octagon)
Weight : 310 Gm. (1 Feet)
Length : 13 Ft. / 16 Ft.
Rubber : 90 Gm. (1 Feet)



UV 112 - 45 X 45 Octagon

Size : 45 X 45 mm Octagon
Weight : 290 Gm. (1 Feet)
Length : 13 Ft. / 16 Ft.
Rubber : 90 Gm. (1 Feet)



UV 113 - 38 X 38 Octagon

Size : 38 X 38 mm Octagon
Weight : 230 Gm. (1 Feet)
Length : 13 Ft. / 16 Ft.
Rubber : 90 Gm. (1 Feet)



UV 114 - 30 X 30 Octagon

Size : 30 X 30 mm Octagon
Weight : 200 Gm. (1 Feet)
Length : 13 Ft. / 16 Ft.
Rubber : 90 Gm. (1 Feet)



UV 115 - 35 X 40 Commercial

Size : 35 X 40 mm Commerical
Weight : 240 Gm. (1 Feet)
Length : 13 Ft. / 16 Ft.



UV 116 - 37 X 41 Commercial

Size : 37 X 41 mm Commercial
Weight : 400 Gm. (1 Feet)
Length : 13 Ft. / 16 Ft.
Rubber : 120 Gm. (1 Feet)

Aluminum Hand Rail

SAAF TRADING
9072 20 20 39



UV 117 - 65 X 41 Triangle

Size : 65 X 41 mm Triangle
Weight : 390 Gm. (1 Feet)
Length : 13 Ft. / 16 Ft.
Rubber : 90 Gm. (1 Feet)



UV 118 - 65 X 38

Size : 65 X 38 mm
Weight : 270 Gm. (1 Feet)
Length : 13 Ft. / 16 Ft.
Rubber : 90 Gm. (1 Feet)



UV 119 - 50 X 40

Size : 40 X 50 mm
Weight : 270 Gm. (1 Feet)
Length : 13 Ft. / 16 Ft.
Rubber : 90 Gm. (1 Feet)



UV 120 - 70 X 35 Without LED

Size : 70 X 35 mm Non LED
Weight : 380 Gm. (1 Feet)
Length : 13 Ft. / 16 Ft.
Rubber : 90 Gm. (1 Feet)



UV 121 - 68 X 44 Right Angle

Size : 68 X 44 mm Right Angle
Weight : 400 Gm. (1 Feet)
Length : 13 Ft. / 16 Ft.
Rubber : 120 Gm. (1 Feet)



UV 122 - 56 X 30 Small Right Angle

Size : 56 X 30 mm Small Right Angle
Weight : 250 Gm. (1 Feet)
Length : 13 Ft. / 16 Ft.
Rubber : 60 Gm. (1 Feet)



UV 123 - 55 X 55 Semi Round

Size : 55 X 55 mm Semi Round
Weight : 400 Gm. (1 Feet)
Length : 13 Ft. / 16 Ft.
Rubber : 120 Gm. (1 Feet)



UV 124 - 60 X 45 mm Diamond

Size : 60 X 45 mm Square
Weight : 360 Gm. (1 Feet)
Length : 13 Ft. / 16 Ft.
Rubber : 90 Gm. (1 Feet)



UV 125 - 82 X 38 Incline

Size : 82 X 38 mm Square
Weight : 350 Gm. (1 Feet)
Length : 13 Ft. / 16 Ft.
Rubber : 90 Gm. (1 Feet)



UV 126 - 65 X 40 Rajwadi

Size : 65 X 40 mm
Weight : 380 Gm. (1 Feet)
Length : 13 Ft. / 16 Ft.
Rubber : 90 Gm. (1 Feet)



UV 127 - 70 X 40 Eye

Size : 70 X 40 mm Eye
Weight : 320 Gm. (1 Feet)
Length : 13 Ft. / 16 Ft.
Rubber : 90 Gm. (1 Feet)



UV 128 - 70 X 35 Capsule

Size : 70 X 33 mm Capsule
Weight : 340 Gm. (1 Feet)
Length : 13 Ft. / 16 Ft.
Rubber : 90 Gm. (1 Feet)



UV 129 - 70 X 35 One Side LED

Size : 70 X 35 mm Single LED
Weight : 380 Gm. (1 Feet)
Length : 13 Ft. / 16 Ft.
Rubber : 90 Gm. (1 Feet)



UV 130 - 70 X 30 2 Side LED

Size : 70 X 30 mm Double LED
Weight : 380 Gm. (1 Feet)
Length : 13 Ft. / 16 Ft.
Rubber : 90 Gm. (1 Feet)



UV 131 - 85 X 35 New Incline LED

Size : 85 X 35 mm New Incline LED
Weight : 400 Gm. (1 Feet)
Length : 13 Ft. / 16 Ft.
Rubber : 90 Gm. (1 Feet)



UV 132 - 83 X 38 Incline LED

Size : 83 X 33 mm Incline LED
Weight : 400 Gm. (1 Feet)
Length : 13 Ft. / 16 Ft.
Rubber : 90 Gm. (1 Feet)

Aluminum Hand Rail

SAAF TRADING
9072 20 20 39



UV 117 - 65 X 41 Triangle

Size : 65 X 41 mm Triangle
Weight : 390 Gm. (1 Feet)
Length : 13 Ft. / 16 Ft.
Rubber : 90 Gm. (1 Feet)



UV 118 - 65 X 38

Size : 65 X 38 mm
Weight : 270 Gm. (1 Feet)
Length : 13 Ft. / 16 Ft.
Rubber : 90 Gm. (1 Feet)



UV 119 - 50 X 40

Size : 40 X 50 mm
Weight : 270 Gm. (1 Feet)
Length : 13 Ft. / 16 Ft.
Rubber : 90 Gm. (1 Feet)



UV 120 - 70 X 35 Without LED

Size : 70 X 35 mm Non LED
Weight : 380 Gm. (1 Feet)
Length : 13 Ft. / 16 Ft.
Rubber : 90 Gm. (1 Feet)



UV 121 - 68 X 44 Right Angle

Size : 68 X 44 mm Right Angle
Weight : 400 Gm. (1 Feet)
Length : 13 Ft. / 16 Ft.
Rubber : 120 Gm. (1 Feet)



UV 122 - 56 X 30 Small Right Angle

Size : 56 X 30 mm Small Right Angle
Weight : 250 Gm. (1 Feet)
Length : 13 Ft. / 16 Ft.
Rubber : 60 Gm. (1 Feet)



UV 129 - 17 X 19 Slim

Size : 55 X 55 mm Semi Round
Weight : 400 Gm. (1 Feet)
Length : 13 Ft. / 16 Ft.
Rubber : 120 Gm. (1 Feet)



UV 140- 50 mm Round Plain Pipe

Size : 60 X 45 mm Square
Weight : 360 Gm. (1 Feet)
Length : 13 Ft. / 16 Ft.
Rubber : 90 Gm. (1 Feet)



UV 125 - 82 X 38 Incline

Size : 82 X 38 mm Square
Weight : 350 Gm. (1 Feet)
Length : 13 Ft. / 16 Ft.
Rubber : 90 Gm. (1 Feet)



UV 126 - 65 X 40 Rajwadi

Size : 65 X 40 mm
Weight : 380 Gm. (1 Feet)
Length : 13 Ft. / 16 Ft.
Rubber : 90 Gm. (1 Feet)



UV 143 - 40 X 40 Square Plain Pipe

Size : 70 X 40 mm. Square
Weight : 320 Gm. (1 Feet)
Length : 13 Ft. / 16 Ft.
Rubber : 90 Gm. (1 Feet)



UV 144 - 30 X 35 Plain Pipe

Size : 70 X 33 mm Capsule
Weight : 340 Gm. (1 Feet)
Length : 13 Ft. / 16 Ft.
Rubber : 90 Gm. (1 Feet)



UV 145 - 45 X 45 Octagon Plain Pipe

Size : 45 X 45 mm
Weight : 380 Gm. (1 Feet)
Length : 13 Ft. / 16 Ft.



UV 146 - 38 X 38 Octagon Plain Pipe

Size : 70 X 30 mm Double LED
Weight : 380 Gm. (1 Feet)
Length : 13 Ft. / 16 Ft.



UV 147

Name : S.S. L-Band Patti 90°



UV 148

Name : S.S. Connector & Jointer Patti 180°

SAAF TRADING
9072 20 20 39

Glass to Pipe Jointer

UV - 149



Wall to Pipe Jointer

UV - 150



UV - 151



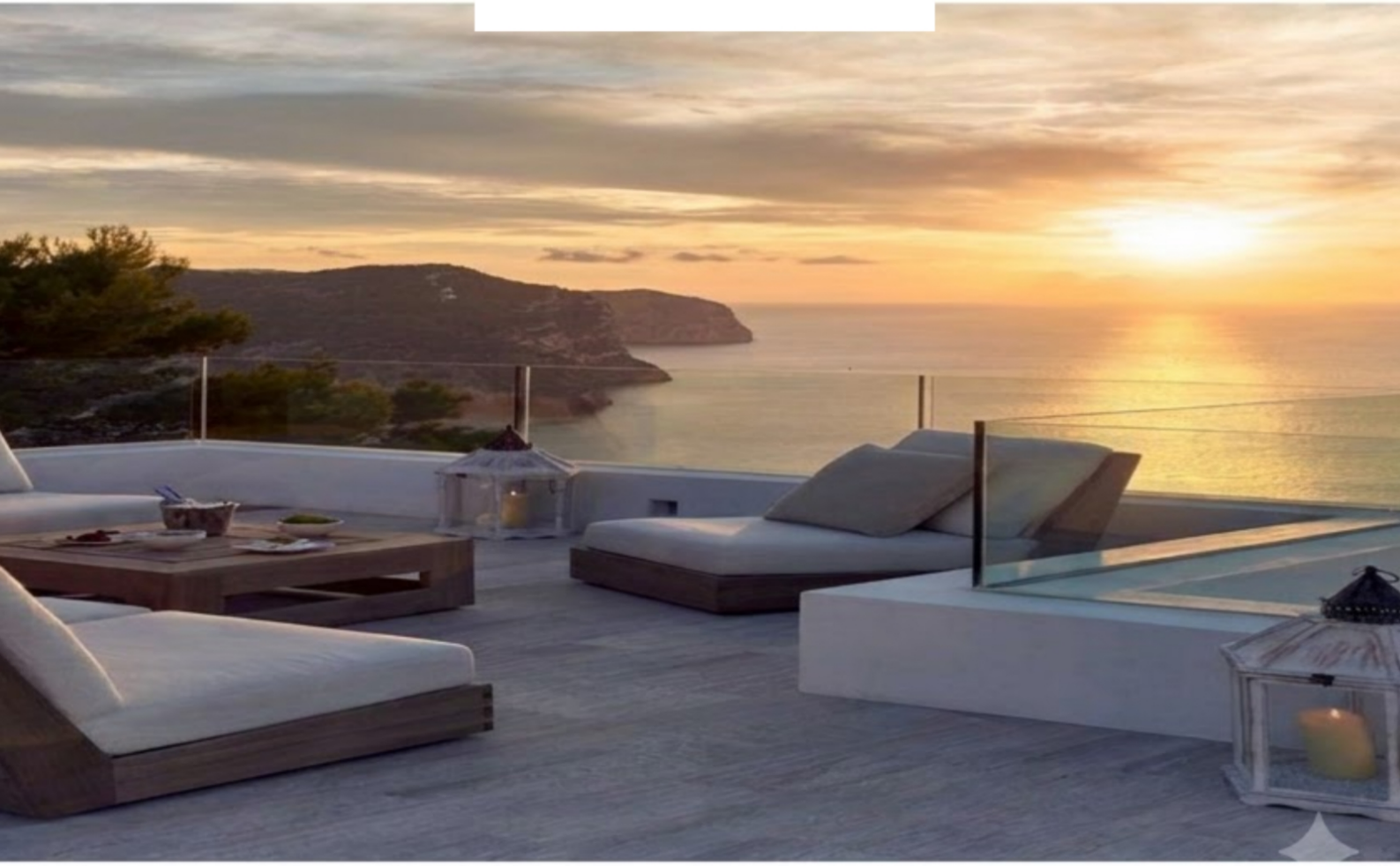

SAAF TRADING
9072 20 20 39



UV 152 - Wall Conceal

Finish : Powder Coating / Wooden/ Anodize



UV 153 - Conector & Jointer

Finish : Powder Coating / Wooden/ Anodize



UV 154 - L-Band & Fix Band

Finish : Powder Coating / Wooden/ Anodize



UV 155 - Wall Conceal

Finish : Powder Coating / Wooden/ Anodize

SAAF TRADING
9072 20 20 39



UV 156

Size : 50mm Modular & Adjustable Band
Finish : Powder Coating / Wooden / Mill



UV 157

Size : 38mm Modular & Adjustable Band
Finish : Powder Coating / Wooden / Mill



UV 158

Size : 50x50mm Modular & Adjustable Band
Finish : Powder Coating / Wooden / Mill



UV 159

Size : 40x44mm Modular & Adjustable Ba
Finish : Powder Coating / Wooden / Mil



UV 160

Size : 25x25mm Modular & Adjustable Band
Finish : Powder Coating / Wooden / Mill

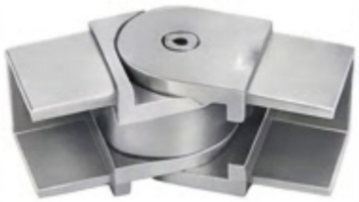

UV 161

Size : 40x40mm Modular & Adjustable Band
Finish : Powder Coating / Wooden / Mill



UV 162

Size : 40x40mm Modular & Adjustable Band
Finish : Powder Coating / Wooden / Mill



UV 163

Size : 45x45mm Modular & Adjustable Ban
Finish : Powder Coating / Wooden / Mill



UV 164

Size : 38x25mm Modular & Adjustable Band
Finish : Powder Coating / Wooden / Mill



UV 165

Size : 50 mm T - Connector
Finish : Powder Coating / Wooden / Mill



UV 166

Size : 50x50 mm T - Connector
Finish : Powder Coating / Wooden / Mill



UV 167

Size : 40x40 mm T - Connector
Finish : Powder Coating / Wooden / Mill

SAAF TRADING
9072 20 20 39



UV 201 - T Bracket Heavy

Type	: Bracket System
Material	: Aluminium 6063
Use	: Indoor - Outdoor
Height	: 97 mm
Length	: 65 mm
Weight	: 0.440 gm
Finish	: Mill, Powder Wooden, Anodize



UV 202 - T Bracket Lite

Type	: Bracket System
Material	: Aluminium 6063
Use	: Indoor - Outdoor
Height	: 97 mm
Length	: 65 mm
Weight	: 0.330 gm
Finish	: Mill, Powder Wooden, Anodize



UV 203 - V Bracket

Type	: Bracket System
Material	: Aluminium 6063
Use	: Indoor - Outdoor
Height	: 100 mm
Length	: 50 mm
Weight	: 0.435 gm
Finish	: Mill, Powder Wooden, Anodize

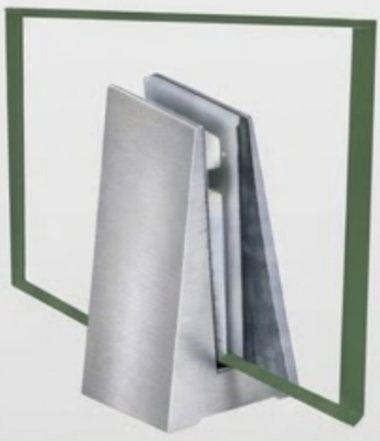

UV 204 - V Bracket PVC

Type	: Bracket System
Material	: Aluminium 6063
Use	: Indoor - Outdoor
Height	: 115 mm
Length	: 55 mm
Weight	: 0.440 gm
Finish	: Mill, Powder Wooden, Anodize

SAAF TRADING
9072 20 20 39



UV 205 - Tower Bracket Small

Type	: Bracket System
Material	: Aluminium 6063
Use	: Indoor - Outdoor
Height	: 100 mm
Length	: 50 mm
Weight	: 0.310 gm
Finish	: Mill, Powder Wooden, Anodize



UV 206 - Tower Bracket Big

Type	: Bracket System
Material	: Aluminium 6063
Use	: Indoor - Outdoor
Height	: 100 mm
Length	: 65 mm
Weight	: 0.380 gm
Finish	: Mill, Powder Wooden, Anodize



UV 207 - New Diamond 4"

Type	: Bracket System
Material	: Aluminium Die Casting
Use	: Indoor - Outdoor
Height	: 100 mm
Length	: -
Weight	: 0.300 gm
Finish	: Mill, Powder Wooden, Anodize



UV 208 - Reduce Bracket

Type	: Bracket System
Material	: Aluminium 6063
Use	: Indoor - Outdoor
Height	: 100 mm
Length	: 50 mm
Weight	: 0.470 gm
Finish	: Mill, Powder Wooden, Anodize

SAAF TRADING
9072 20 20 39

UV 209- Kite Bracket



- Type : Bracket System
- Material : Aluminium Die Casting
- Use : Indoor & Outdoor
- Size : 6" Inch
- Finish : Mill, Powder Coating, Wooden Finish

UV 210- Round Bracket



- Type : Bracket System
- Material : Aluminium Die Casting
- Use : Indoor & Outdoor
- Size : 4" Inch
- Finish : Mill, Powder Coating, Wooden Finish

UV 211- Diamond Bracket



- Type : Bracket System
- Material : Aluminium Die Casting
- Use : Indoor & Outdoor
- Size : 4" Inch
- Finish : Mill, Powder Coating, Wooden Finish

UV 212- Square Bracket



- Type : Bracket System
- Material : Aluminium Die Casting
- Use : Indoor & Outdoor
- Size : 2x3, 3x4
- Finish : Mill, Powder Coating, Wooden Finish

UV 213- Wave Bracket



- Type : Bracket System
- Material : Aluminium Die Casting
- Use : Indoor & Outdoor
- Size : 4" Inch
- Finish : Mill, Powder Coating, Wooden Finish

UV 214- Oval Bracket



- Type : Bracket System
- Material : Aluminium Die Casting
- Use : Indoor & Outdoor
- Size : 4" Inch
- Finish : Mill, Powder Cooting, Wooden Finish

UV 215- Triangle Bracket



- Type : Bracket System
- Material : Aluminium Die Casting
- Use : Indoor & Outdoor
- Size : 4" Inch
- Finish : Mill, Powder Coating, Wooden Finish

UV 216- Hexa Triangle Bracket



- Type : Bracket System
- Material : Aluminium Die Casting
- Use : Indoor & Outdoor
- Size : 2x3, 3x5
- Finish : Mill, Powder Coating, Wooden Finish

UV 217- New Angle Bracket



- Type : Bracket System
- Material : Aluminium Die Casting
- Use : Indoor & Outdoor
- Size : 2x3, 3x5
- Finish : Mill, Powder Cooting, Wooden Finish

Aluminum Die Casting Bracket

SAAF TRADING
9072 20 20 39

UV 218- Half Ovel Bracket



- Type : Bracket System
- Material : Aluminium Die Casting
- Use : Indoor & Outdoor
- Size : 6" Inch
- Finish : Mill, Powder Coating, Wooden Finish

UV 219- Diamond Bracket



- Type : Bracket System
- Material : Aluminium Die Casting
- Use : Indoor & Outdoor
- Size : 4", 8" Inch
- Finish : Mill, Powder Coating, Wooden Finish

UV 220- UV Special Bracket



- Type : Bracket System
- Material : Aluminium Die Casting
- Use : Indoor & Outdoor
- Size : 5" Inch
- Finish : Mill, Powder Coating, Wooden Finish

UV 221- Triangle Bracket



- Type : Bracket System
- Material : Aluminium Die Casting
- Use : Indoor & Outdoor
- Size : 4", 7.5" Inch
- Finish : Mill, Powder Coating, Wooden Finish

UV 222- Butterfly Bracket



- Type : Bracket System
- Material : Aluminium Die Casting
- Use : Indoor & Outdoor
- Size : Small, Big
- Finish : Mill, Powder Coating, Wooden Finish

UV 223- Leaf Bracket



- Type : Bracket System
- Material : Aluminium Die Casting
- Use : Indoor & Outdoor
- Size : 6" Inch
- Finish : Mill, Powder Coating, Wooden Finish

UV 224- Cell Bracket



- Type : Bracket System
- Material : Aluminium Die Casting
- Use : Indoor & Outdoor
- Size : 6" Inch
- Finish : Mill, Powder Coating, Wooden Finish

UV 225- Leaf Bracket



- Type : Bracket System
- Material : Aluminium Die Casting
- Use : Indoor & Outdoor
- Size : 2x3
- Finish : Mill, Powder Coating, Wooden Finish

UV 226- Point Fitting



- Type : Point Fitting
- Material : S.S. 304
- Use : Indoor & Outdoor
- Size : 50 mm, 38 mm
- Finish : Mill, Powder Coating, Wooden Finish

Aluminum Die Casting Spigot

SAAF TRADING
9072 20 20 39

UV 227- Hexa Plate Spigot



- Type : Bracket System
- Material : Aluminium Die Casting
- Use : Indoor & Outdoor
- Size : 6", 9" Inch
- Finish : Mill, Powder Coating, Wooden Finish

UV 228- Diamond Spigot



- Type : Bracket System
- Material : Aluminium Die Casting
- Use : Indoor & Outdoor
- Size : 5", 9" Inch
- Finish : Mill, Powder Coating, Wooden Finish

UV 229- 50 x 40 Spigot



- Type : Spigot System
- Material : Aluminium Die Casting
- Use : Indoor & Outdoor
- Size : 5", 8" Inch
- Finish : Mill, Powder Coating, Wooden Finish

UV 230- 40 x 40 Spigot



- Type : Spigot System
- Material : Aluminium Die Casting
- Use : Indoor & Outdoor
- Size : 6", 9" Inch
- Finish : Mill, Powder Coating, Wooden Finish

UV 231- Ovel Spigot



- Type : Spigot System
- Material : Aluminium Die Casting
- Use : Indoor & Outdoor
- Size : 6", 9" Inch
- Finish : Mill, Powder Coating, Wooden Finish

UV 232- 50 mm Round Spigot



- Type : Spigot System
- Material : Aluminium Die Casting
- Use : Indoor & Outdoor
- Size : 5", 8" Inch
- Finish : Mill, Powder Coating, Wooden Finish

UV 233- 50x40 Square Spigot



- Type : Spigot System
- Material : Aluminium Die Casting
- Use : Indoor & Outdoor
- Size : 5", 9" Inch
- Finish : Mill, Powder Coating, Wooden Finish

UV 234- 50x50 Square Spigot



- Type : Spigot System
- Material : Aluminium Die Casting
- Use : Indoor & Outdoor
- Size : 6", 9" Inch
- Finish : Mill, Powder Coating, Wooden Finish

UV 235- Hexagon Spigot



- Type : Spigot System
- Material : Aluminium Die Casting
- Use : Indoor & Outdoor
- Size : 6", 9" Inch
- Finish : Mill, Powder Coating, Wooden Finish

Aluminum Die Casting Spigot

SAAF TRADING
9072 20 20 39

UV 236- SquarePlate Spigot



- Type : Spigot System
- Material : Aluminium Die Casting
- Use : Indoor & Outdoor
- Size : 4", 6", 9" Inch
- Finish : Mill, Powder Coating, Wooden Finish

UV 237- New 50 mm Round Spigot



- Type : Spigot System
- Material : Aluminium Die Casting
- Use : Indoor & Outdoor
- Size : 6", 10" Inch
- Finish : Mill, Powder Coating, Wooden Finish

UV 238- Square Tower Spigot



- Type : Spigot System
- Material : Aluminium Die Casting
- Use : Indoor & Outdoor
- Size : 6", 10" Inch
- Finish : Mill, Powder Coating, Wooden Finish

UV 239- Hexa Tower Spigot



- Type : Spigot System
- Material : Aluminium Die Casting
- Use : Indoor & Outdoor
- Size : 6", 10" Inch
- Finish : Mill, Powder Coating, Wooden Finish

UV 240- Rocket Spigot



- Type : Spigot System
- Material : Aluminium Die Casting
- Use : Indoor & Outdoor
- Size : 6", 9" Inch
- Finish : Mill, Powder Coating, Wooden Finish

UV 241-Square Round Spigot



- Type : Spigot System
- Material : Aluminium Die Casting
- Use : Indoor & Outdoor
- Size : 5", 9" Inch
- Finish : Mill, Powder Coating, Wooden Finish

UV 242- Small Ovel Spigot



- Type : Spigot System
- Material : Aluminium Die Casting
- Use : Indoor & Outdoor
- Size : 4", 6", 9" Inch
- Finish : Mill, Powder Coating, Wooden Finish

UV 243- Long Square Spigot



- Type : Spigot System
- Material : Aluminium Die Casting
- Use : Indoor & Outdoor
- Size : 6", 9", Inch
- Finish : Mill, Powder Coating, Wooden Finish

UV 244- 50x40 Tower Spigot



- Type : Spigot System
- Material : Aluminium Die Casting
- Use : Indoor & Outdoor
- Size : 6", 9" Inch
- Finish : Mill, Powder Coating, Wooden Finish

Aluminum Die Casting Spigot

SAAF TRADING
9072 20 20 39

UV 245- 50x40 CapSpigot



- Type : Spigot System
- Material : Aluminium Die Casting
- Use : Indoor & Outdoor
- Size : 4", 6", 9" Inch
- Finish : Mill, Powder Coating, Wooden Finish

UV 246- New Curve Spigot



- Type : Spigot System
- Material : Aluminium Die Casting
- Use : Indoor & Outdoor
- Size : 6", 9" Inch
- Finish : Mill, Powder Coating, Wooden Finish

UV 247- New Grimisha Spigot



- Type : Spigot System
- Material : Aluminium Die Casting
- Use : Indoor & Outdoor
- Size : 6", 9" Inch
- Finish : Mill, Powder Coating, Wooden Finish

UV 248- New UV Spigot



- Type : Spigot System
- Material : Aluminium Die Casting
- Use : Indoor & Outdoor
- Size : 6", 9" Inch
- Finish : Mill, Powder Coating, Wooden Finish

UV 249- Piramid Spigot



- Type : Spigot System
- Material : Aluminium Die Casting
- Use : Indoor & Outdoor
- Size : 6", 9" Inch
- Finish : Mill, Powder Coating, Wooden Finish

UV 250-Half Ovel Spigot



- Type : Spigot System
- Material : Aluminium Die Casting
- Use : Indoor & Outdoor
- Size : 6", 9" Inch
- Finish : Mill, Powder Coating, Wooden Finish

UV 251- New Diamond Spigot



- Type : Spigot System
- Material : Aluminium Die Casting
- Use : Indoor & Outdoor
- Size : 6", 9" Inch
- Finish : Mill, Powder Coating, Wooden Finish

UV 252- New Round Plate Spigot



- Type : Spigot System
- Material : Aluminium Die Casting
- Use : Indoor & Outdoor
- Size : 6", 9" Inch
- Finish : Mill, Powder Coating, Wooden Finish

UV 253- Octagon Spigot



- Type : Spigot System
- Material : Aluminium Die Casting
- Use : Indoor & Outdoor
- Size : 6", 9" Inch
- Finish : Mill, Powder Coating, Wooden Finish

Aluminum Die Casting Spigot

SAAF TRADING
9072 20 20 39

UV 254-Square Border Spigot



- Type : Spigot System
- Material : Aluminium Die Casting
- Use : Indoor & Outdoor
- Size : 9" Inch
- Finish : Mill, Powder Coating, Wooden Finish

UV 255- Full Square Spigot



- Type : Spigot System
- Material : Aluminium Die Casting
- Use : Indoor & Outdoor
- Size : 9" Inch
- Finish : Mill, Powder Coating, Wooden Finish

UV 256- Piramid Bracket



- Type : Spigot System
- Material : Aluminium Die Casting
- Use : Indoor & Outdoor
- Size : 4", 6" Inch
- Finish : Mill, Powder Coating, Wooden Finish

UV 257-UV F Bracket



- Height : 10" Inch
- Material : Aluminium Die Casting
- Use : Indoor & Outdoor
- Finish : Mill, Powder Coating, Wooden Finish

UV 258- Six Part F Bracket



- Height : 10" Inch
- Material : Aluminium Die Casting
- Use : Indoor & Outdoor
- Finish : Mill, Powder Coating, Wooden Finish

UV 259-Radius F Spigot



- Height : 11" Inch
- Material : Aluminium Die Casting
- Use : Indoor & Outdoor
- Finish : Mill, Powder Coating, Wooden Finish

UV 260- Round F Bracket



- Height : 11.5" Inch
- Material : Aluminium Die Casting
- Use : Indoor & Outdoor
- Finish : Mill, Powder Coating, Wooden Finish

UV 261-Triangle F Bracket



- Height : 11.5" Inch
- Material : Aluminium Die Casting
- Use : Indoor & Outdoor
- Finish : Mill, Powder Coating, Wooden Finish

UV 262- Heavy F Bracket



- Height : 12" Inch
- Material : Aluminium Die Casting
- Use : Indoor & Outdoor
- Finish : Mill, Powder Coating, Wooden Finish

SAAF TRADING
9072 20 20 39

Powder Coating



Anodize Finish



SAAF TRADING
9072 20 20 39

Wooden Finish



SAAF TRADING

9072 20 20 39